Electro-Voice

EVOLVE G2 Portable Column Loudspeaker

EVOLVE 30M G2, EVOLVE 50M G2, EVOLVE50 G2

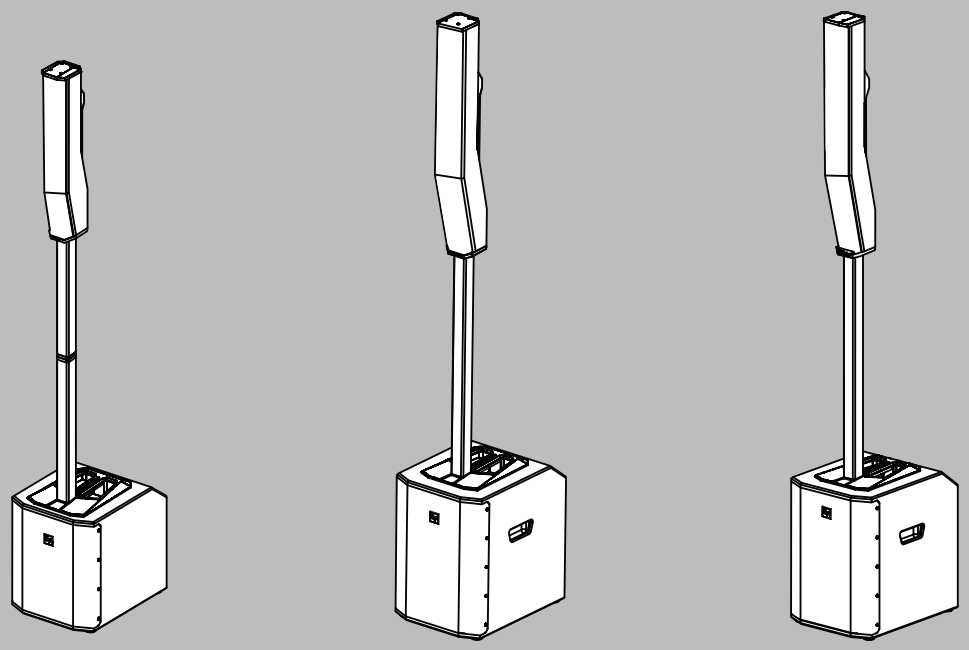

en User manual

Table of contents

1	**Safety**	**6**
1.1	Important safety instructions	6
1.2	Precautions	7
1.3	Suspension	8
2	**Product registration**	**9**
3	**Short information**	**10**
3.1	Parts included	10
4	**Description**	**14**
4.1	Quick setup	15
5	**Installation**	**17**
6	**Using Bluetooth® for audio and control**	**19**
6.1	Pairing Bluetooth® audio	19
6.2	Connecting the QuickSmart App for control	19
7	**Amplifier panel controls**	**21**
7.1	EVOLVE 30M G2 and EVOLVE 50M G2	21
7.2	EVOLVE 50 G2	23
8	**System status indicators**	**25**
8.1	EVOLVE 30M G2 and EVOLVE 50M G2	25
8.2	EVOLVE 50 G2	26
8.3	System protection limiters	27
9	**DSP control menu**	**29**
9.1	Main control menu	29
9.1.1	MODE control	29
9.1.2	SUB LEVEL control	30
9.1.3	TREBLE/MID/BASS control	30
9.1.4	MAIN EQ menu	30
9.1.5	DELAY control	32
9.1.6	FX control	32
9.1.7	AFS control	32
9.1.7.1	Reducing feedback	32
9.1.8	SPEAKER OUT control	33
9.1.9	MIX OUT control	33
9.1.10	MANUAL GAIN control	35
9.1.11	BLUETOOTH menu	36
9.1.12	LINK SPEAKERS function	36
9.1.12.1	Linking speakers	36
9.1.13	AUTO RECONNECT function	37
9.1.14	LED control	37
9.1.15	DISPLAY menu	37
9.1.15.1	Locking the DSP control menu	38
9.1.16	DIM control	38
9.1.17	BRIGHT control	39
9.1.18	NAME command	39
9.1.18.1	Naming the loudspeaker	39
9.1.19	STORE PRESET command	39
9.1.19.1	Storing customized user settings	39
9.1.20	RECALL PRESET command	40
9.1.20.1	Recalling customized user settings	40

9.1.21	RESET command	40
9.1.21.1	Resetting the system	40
9.1.22	IMPRINT & LICENSE and INFO	40
9.2	Input DSP control menu	41
9.2.1	LEVEL control	41
9.2.2	GAIN control	41
9.2.3	PHANTOM control	42
9.2.4	PRESET control	42
9.2.5	COMP control	42
9.2.6	TREBLE/MID/BASS control	43
9.2.7	PHASE INVERT control	43
9.2.8	FX control	43
9.2.9	AUX control	44
9.2.10	PAN/BAL control	44
9.2.11	DUCKER control	44
9.2.11.1	Engaging the ducker	44
9.2.12	INPUT LINK control	45
9.2.13	NAME command	45
9.2.13.1	Naming the input channel	45
9.3	AUX control menu	46
9.3.1	AUX LEVEL control	46
9.3.2	AUX EQ menu	46
9.3.3	AUX OUT ROUTING control	47
9.3.4	AUX SEND control	47
9.3.5	FX TO AUX controls	48
10	**Recommended configurations**	**49**
10.1	Stereo pair using XLR cable	49
10.2	Stereo pair using QuickSmart Link	50
10.3	DJ performance	52
10.4	Solo musician performance	54
10.5	Speaking event	55
10.6	Bluetooth true wireless stereo (TWS)	56
10.7	Stereo with additional subwoofer using XLR cable	58
10.8	Stereo mains with monitor	59
11	**Troubleshooting**	**60**
12	**Technical data**	**64**
12.1	Block diagram	68
12.2	Dimensions	70
13	**Appendices**	**72**
13.1	DSP control menu list	72
13.1.1	Main control menu list	72
13.1.2	Input DSP control menu list	78
13.1.2.1	EVOLVE 30M G2 and EVOLVE 50M G2	78
13.1.2.1.1	INPUT 1-4	78
13.1.2.1.2	INPUT 5/6	81
13.1.2.1.3	INPUT 7/8	82
13.1.2.2	EVOLVE 50 G2	83
13.1.2.2.1	INPUT 1-2	83
13.1.2.2.2	INPUT 3/4	85

13.1.2.2.3	INPUT 5/6	86
13.1.3	AUX control menu list	87
13.2	Audio FX	89
13.2.1	FX1 and FX2 on EVOLVE 30M G2 and EVOLVE 50M G2	89
13.2.2	FX on EVOLVE 50 G2 effects	90
13.3	QuickSmart Link compatibility	91
13.4	Parameters synced over QuickSmart Link	91
13.5	Warranty information	92
13.6	Regulatory information	92
13.6.1	FCC information	92
13.6.2	Simplified Declaration of Conformity (sDoC) for Europe (CE)	93
13.6.3	Regulatory notice for CE - Information concerning the use of the apparatus	96
13.6.4	Certifications	96
13.6.5	Notices	97

1 Safety

1.1 Important safety instructions

1. Read and keep these safety instructions. Follow all instructions and heed all warnings.
2. Download the latest version of the applicable installation manual from www.electrovoice.com for installation instructions.

Information
Refer to the Installation Manual for instructions.

3. Follow all installation instructions and observe the following alert signs:

Notice!
Containing additional information. Usually, not observing a notice does not result in damage to the equipment or personal injuries.

Caution!
The equipment or the property can be damaged, or persons can be injured if the alert is not observed.

Danger!
Risk of electric shock.

4. **Clean only with dry cloth. -** Unplug the apparatus from the outlet before cleaning. Do not use liquid cleaners or aerosol cleaners.
5. **Condensation -** In order to avoid condensation; wait a few hours before turning on the equipment when it is transported from a cold to a warm space.
6. The apparatus shall not be exposed to dripping or splashing and no objects filled with liquids, such as vases, shall be placed on the apparatus.

Danger!
To reduce the risk of fire and electric shock, do not expose this apparatus to rain or moisture.

7. **Do not block any ventilation openings. Install in accordance with the manufacturer's instructions. -** Openings in the enclosure, if any, are provided for ventilation and to ensure reliable operation of the apparatus and to protect it from overheating. These openings must not be blocked or covered. This apparatus should not be placed in a built-in installation unless proper ventilation is provided or the manufacturer's instructions have been adhered to.
8. Do not install near any heat sources such as radiators, heat registers, stoves, or other apparatus (including amplifiers) that produce heat or in direct sunlight**.**
9. No naked flame sources, such as lighted candles, should be placed on the apparatus.
10. **Only use attachments/accessories specified by the manufacturer. -** Any mounting of the apparatus should follow the manufacturer's instructions, and should use a mounting accessory recommended by the manufacturer.

11. **Use only with the cart, stand, tripod, bracket or table specified by the manufacturer, or sold with the apparatus**. - When a cart is used, use caution when moving the cart/apparatus combination to avoid injury from tip-over. Quick stops, excessive force, and uneven surfaces may cause the appliance and cart combination to overturn.
12. System installation and servicing by qualified personnel only, in accordance with applicable local codes. No user-serviceable parts inside.
13. Devices installed above 2 m height may cause injury when falling down. Preventive measures must be taken.
14. **Replacement parts -** When replacement parts are required, be sure the service technician has used replacement parts specified by the manufacturer or having the same characteristics as the original part. Unauthorized substitutions may result in fire, electric shock or other hazards.
15. **Safety check -** Upon completion of any service or repairs to this apparatus, ask the service technician to perform safety checks to determine that the apparatus is in proper operating condition.

Warning!
This product is designed ONLY to be suspended with authorized Electro-Voice mounting accessories. Do NOT use non-authorized brackets or methods to suspend the loudspeaker. Handles on Electro-Voice loudspeakers are intended to only be used for temporary transport by people or for use with Electro-Voice authorized mounting accessories ONLY. Items such as fiber rope, wire rope, cables, or other types of materials cannot be used to suspend the loudspeaker from the handles.

Warning!
Use of non-authorized accessories or attachments with this or any Electro-Voice product is at your own discretion. Use of non-authorized accessories or attachments can result in product malfunction, injury, or death.
The user assumes all liability and may result in the warranty being voided.

Caution!
Do not attempt to move this loudspeaker system when it is fully assembled.
You may damage the system or cause personal injury.

1.2 Precautions

- Do not use Electro-Voice loudspeakers in an environment where temperatures are below 0°C (32°F) or exceed +35°C (95°F).
- Electro-Voice loudspeakers are easily capable of generating sound pressure levels sufficient to cause permanent hearing damage to anyone within normal coverage distance. Caution should be taken to avoid prolonged exposure to sound pressure levels exceeding 90 dB. To prevent hearing damage do not listen at high volume levels for long periods.

1.3 Suspension

Warning!
Suspending any object is potentially dangerous and should only be attempted by individuals who have a thorough knowledge of the techniques and regulations of suspending objects overhead. Electro-Voice strongly recommends all loudspeakers be suspended taking into account all current national, federal, state, and local laws and regulations. It is the responsibility of the installer to ensure all loudspeakers are safely installed in accordance with all such requirements. When loudspeakers are suspended, Electro-Voice strongly recommends the system be inspected at least once per year or as laws and regulations require. If any sign of weakness or damage is detected, remedial action should be taken immediately. The user is responsible for making sure the wall, ceiling, or structure is capable of supporting all objects suspended overhead. Any hardware used to suspend a loudspeaker not associated with Electro-Voice is the responsibility of others.

Warning!
Do not suspend this product in any other manner than explicitly described in this manual, or Electro-Voice installation guides. Suspending any object (loudspeaker) is potentially dangerous and should only be done by individuals with thorough knowledge of techniques, materials, and regulations for suspending objects overhead. Electro-Voice loudspeakers can only be suspended using accessories and hardware described in Electro-Voice manuals and installation guides. **Do NOT use handles to suspend the loudspeaker. Handles on Electro-Voice loudspeakers are intended to only be used for temporary transport by people. Items, such as fiber rope, wire rope, cables, or other types of materials cannot be used to suspend loudspeaker from the handles.** Any hardware used to suspend a loudspeaker not associated with Electro-Voice is the responsibility of others.

Warning!
Use of non-authorized accessories or attachments with this or any Electro-Voice product is at your own discretion. Use of non-authorized accessories or attachments can result in product malfunction, injury, or death.
The user assumes all liability and may result in the warranty being voided.

2 Product registration

Register your EVOLVE G2: electrovoice.com/register

3 Short information

This document is applicable to these products:

CTN	Description
EVOLVE30M-G2-US	Portable column system black US 30M G2
EVOLVE30M-G2-EU	Portable column system black EU 30M G2
EVOLVE30M-G2-W	Portable column system white US&EU 30MG2
EVOLVE50-TB-G2	Column, pole black w/bag EVOLVE50-50M G2
EVOLVE50-TW-G2	Column, pole white w/bag EVOLVE50-50M G2
EVOLVE50-SB-G2-US	12" sub black US cord EVOLVE 50 G2
EVOLVE50-SB-G2-EU	12" sub black EU cord EVOLVE 50 G2
EVOLVE50-SW-G2	12" sub white US&EU cords EVOLVE 50 G2
EVOLVE50M-SB-G2-US	12" sub black US cord EVOLVE 50M G2
EVOLVE50M-SB-G2-EU	12" sub black EU cord EVOLVE 50M G2
EVOLVE50M-SW-G2	12" sub white US&EU cords EVOLVE 50M G2
EVOLVE50M-CB-G2-EU	Portable column complete, EU, black
EVOLVE50M-CB-G2-US	Portable column complete, US, black
EVOLVE50M-CW-G2-EU	Portable column complete, EU, white
EVOLVE50M-CW-G2-US	Portable column complete, US, white
EVOLVE50-CB-G2-EU	Portable column complete, EU, black
EVOLVE50-CB-G2-US	Portable column complete, US, black
EVOLVE50-CW-G2-EU	Portable column complete, EU, white
EVOLVE50-CW-G2-US	Portable column complete, US, white

3.1 Parts included

Make sure that all parts are included and not damaged. If the packaging or any parts are damaged, contact your shipper. If any parts are missing, contact your Sales or Customer Service Representative.

EVOLVE30M-G2-US, EVOLVE30M-G2-EU, EVOLVE30M-G2-W

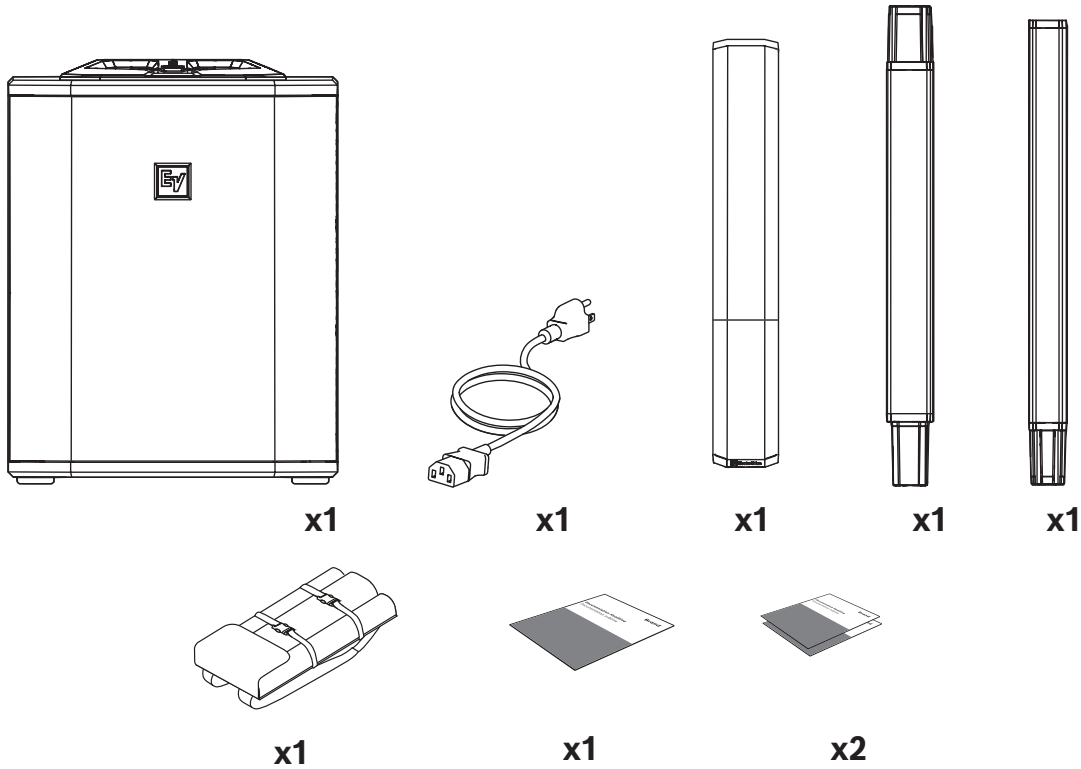

Quantity	Component
1	Subwoofer
1[1,2]	Power cord
1	Column array
2	Sub pole
1	Carry bag
1	Quick user guide
2	Safety and security information

[1] EVOLVE30M-G2-W includes two power cords.

[2] US and EU power cords available in selected countries. Contact your nearest Electro-Voice dealer or Electro-Voice distributor for more information.

EVOLVE50-SB-G2-US, EVOLVE50-SB-G2-EU, EVOLVE50-SW-G2, EVOLVE50M-SB-G2-US, EVOLVE50M-SB-G2-EU, EVOLVE50M-SW-G2

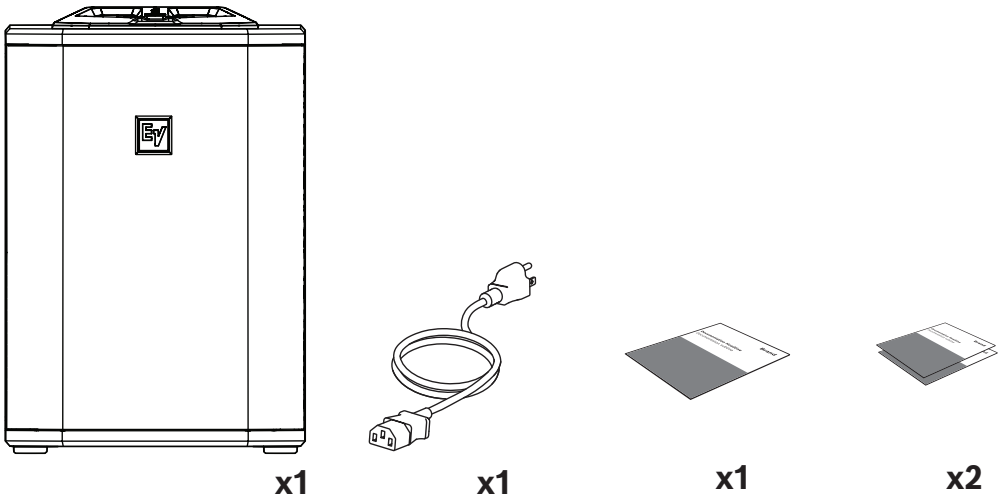

Quantity	Component
1	Subwoofer
1[1,2]	Power cord
1	Quick user guide
2	Safety and security information

[1] EVOLVE50-SW-G2 and EVOLVE50M-SW-G2 include two power cords.
[2] US and EU power cords available in selected countries. Contact your nearest Electro-Voice dealer or Electro-Voice distributor for more information.

EVOLVE50-TB-G2, EVOLVE50-TW-G2

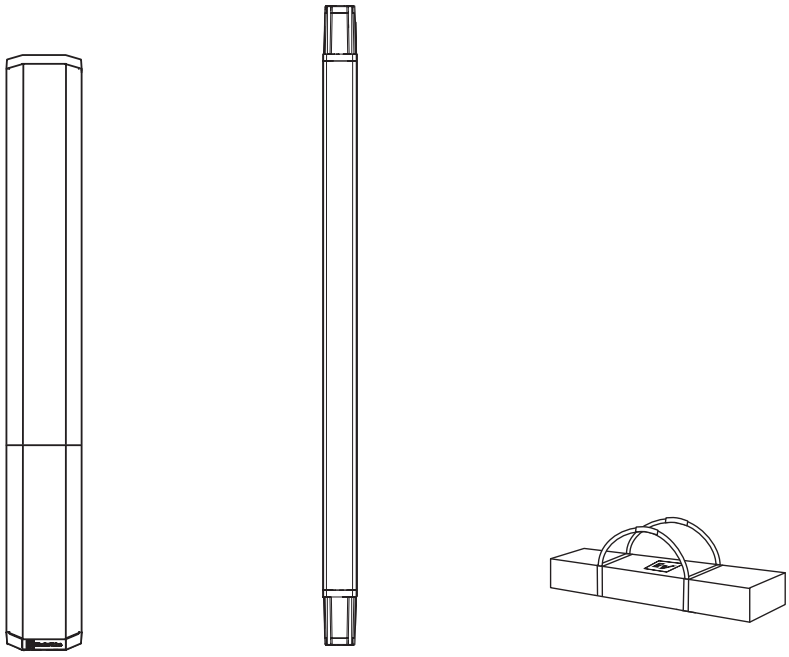

x1 x1 x1

Quantity	Component
1	Column array
1	Sub pole
1	Carry bag

4 Description

Thank you for choosing an Electro-Voice portable column system. Please take time to consult the manual to understand all the features built into your EV system and fully utilize its performance capabilities.
EVOLVE 30M G2, EVOLVE 50M G2, and EVOLVE 50 G2 are the new generation of the EVOLVE Column Loudspeaker system family. While keeping the EVOLVE's ease of assembly, EVOLVE G2 improves the peak output of the previous generation and enhances the portability of the system, catering to the evolving needs of professional users including DJs, bands, production companies, event organizers, and venues.
EVOLVE G2 deliver up to 2 dB higher maximum SPL and provides upgraded DSP features, such as QuickSmart Link, music ducking, AFS, switchable 48V phantom power, and increased FX combination possibilities. All features are controllable via a larger, color LCD screen.
The 10- and 12-inch subwoofers are designed to provide deep bass and optimum sound quality for small to medium events. The subwoofer laminar flow vent design enhances the low-frequency output and efficiency. The portability of the system is also improved by adding a new top handle.
The column systems are integrated into the QuickSmart App ecosystem, which allows the user to control it as part of a system with other Bluetooth-enabled Electro-Voice portable speakers.
EVOLVE G2 features industry standard connectors for microphones and line-level signals, including XLR/TRS combo jacks, stereo RCA/3.5-mm line input, and Bluetooth® true wireless stereo (TWS) streaming. The mixer models also provide more inputs, footswitch (including for FX control), aux and manual gain.
EVOLVE G2 is available in black and white finishes.

Accessories

The EVOLVE G2 family includes a select complement of accessories.
All accessories are sold separately.

CTN	Description
EVOLVE30M-CVR-G2	Soft cover for EVOLVE 30M G2 subwoofer
EVOLVE50-CVR-G2	Soft cover for EVOLVE 50M G2 and EVOLVE 50 G2 subwoofer
EVOLVE30M-CASE	Carrying case for EVOLVE 30M and EVOLVE 30M G2
EVOLVE50-CASE	Column speaker carrying case, with wheels
EVOLVE50-PL-SB	Column speaker pole, short, black
EVOLVE50-PL-SW	Column speaker pole, short, white

- **Padded slip cover** - slip over cover for the subwoofer, with hook and loop flap for top handle.
- **Carrying case** - rolling case for subwoofer in high-quality poly material. Includes a telescoping handle and buckles for attaching the column array carrying bag.
- **Short distance pole** - to be used when the EVOLVE G2 system is placed in an elevated surface such as a stage. The short distance pole reduces the system height by 445 mm (17.5 in).

4.1 Quick setup

To set up the loudspeaker:

Step	Illustration
1. Connect the AC power cord from a grounded receptacle to the **MAINS IN**.	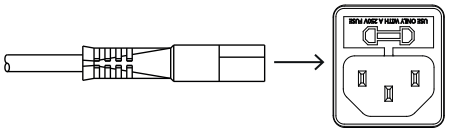
2. Switch power to **ON**.	
3. Adjust the volume to 0 dB using the **MASTER VOLUME** knob.	
4. Press the input selection softkey to select the input channel. The softkey illuminates once selected. 5. Use the **MASTER VOLUME** knob to adjust **INPUT LEVEL** to **MUTE**.	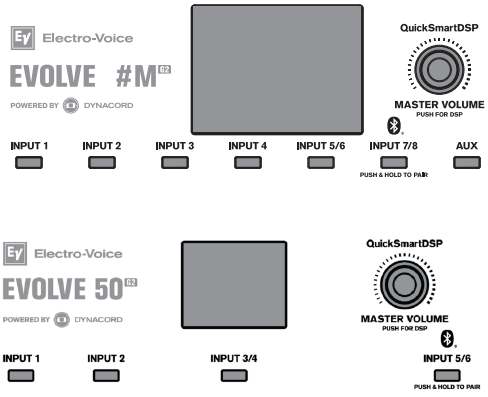
6. Connect an audio source using appropriate XLR, TRS, or RCA (cinch) cables. **Note**: Make sure the audio source is **MUTE** or at a low level before making connection. After connection is made, increase the source's output to a reasonable level.	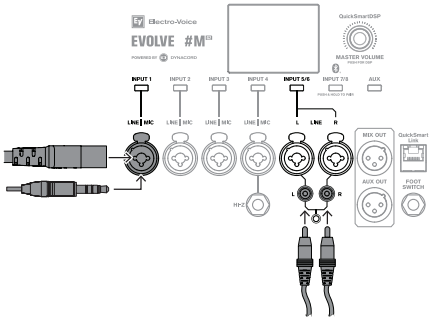 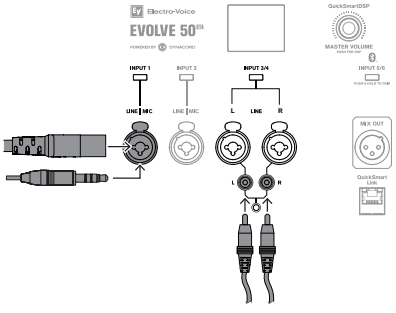

7. Adjust the **INPUT LEVEL** until the signal peaks are just below maximum level or the required output is achieved. If **CLIP** is indicated, turn the level down until the **CLIP** indication disappears. 8. Press the input selection softkey again to exit the channel menu.	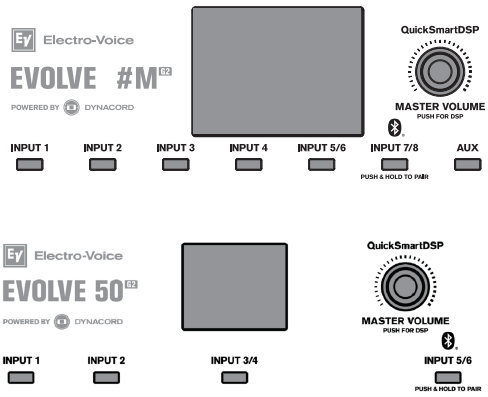
9. Using the **MASTER VOLUME** knob, adjust the volume until you get the required output from the loudspeaker.	

5 Installation

Caution!
Do not attempt to move this loudspeaker system when it is fully assembled.
You may damage the system or cause personal injury.

Assembling the loudspeaker system

To assemble the loudspeaker system:

1. Place the subwoofer on a level and stable surface.
2. Assemble and/or install the pole[1].

   [1] Refer to Pole assembly and installation table. Notice that the pole has magnets (A) at each end.

Portable column loudspeaker	Step 2
EVOLVE 30M G2	Assemble the **pole** by connecting the two sections together and inserting them into the subwoofer base.
EVOLVE 50M G2 and EVOLVE 50 G2	Insert the **pole** into the subwoofer base.

Table 5.1: Pole assembly and installation

3. Place the column array loudspeaker system on top of the subwoofer pole.

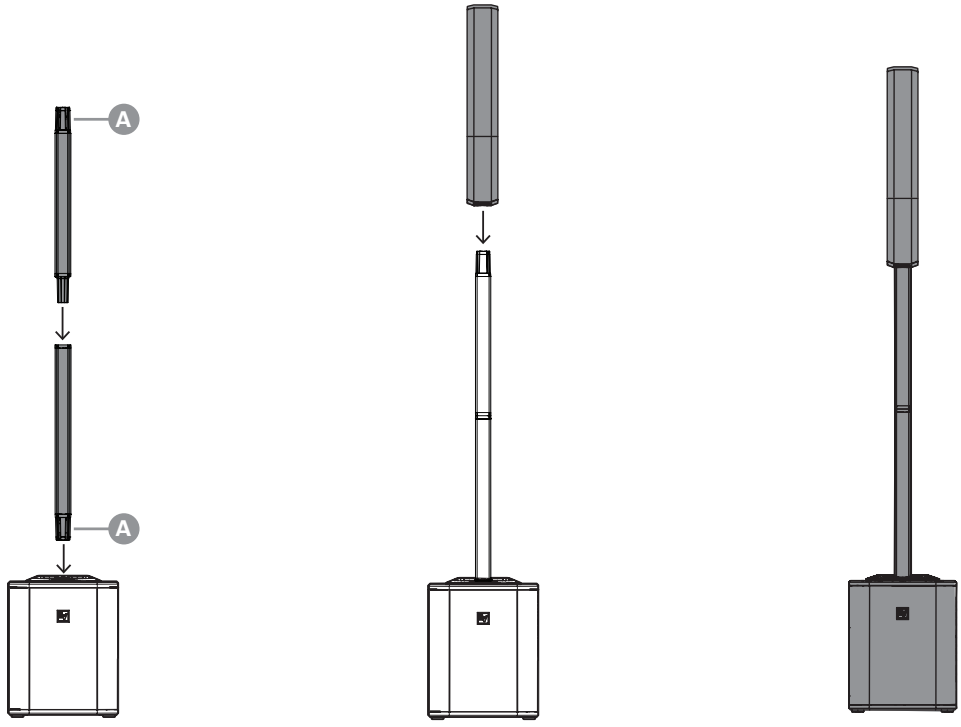

Figure 5.1: EVOLVE 30M G2

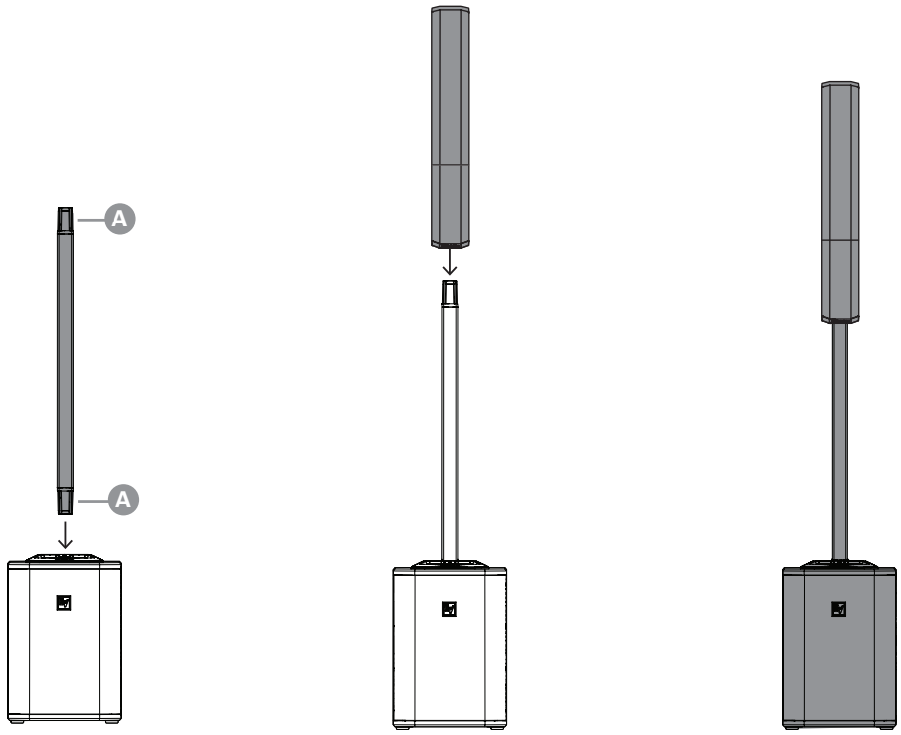

Figure 5.2: EVOLVE 50M G2, EVOLVE 50 G2

6 Using Bluetooth® for audio and control

6.1 Pairing Bluetooth® audio

To place the loudspeaker in pairing mode for audio:

1. Press and hold the input selection softkey to enable pairing mode.
   The message **HOLD FOR PAIRING** displays.

Portable column loudspeaker	Input selection softkey
EVOLVE 30M G2 and EVOLVE 50M G2	INPUT 7/8
EVOLVE 50 G2	INPUT 5/6

Table 6.1: Input selection softkeys to enable pairing mode

Notice!
The loudspeaker remains in control pairing mode for about five minutes. If control pairing fails, repeat step 1 or clean up your Bluetooth-paired devices list. Find more information and troubleshooting at: https://go.electrovoice.com/qsm

2. Wait until **BT PAIRING MODE ON** and the 4-digit ID display on the LCD.
3. On your mobile device's Bluetooth® settings menu, select the corresponding EVOLVE G2 loudspeaker with the matching 4-digit ID.
   You get a message from your operating system about pairing for each device which has to be accepted.
   This pairs the mobile device to the EVOLVE G2 loudspeaker for audio streaming.

To connect two loudspeakers via Bluetooth® true wireless stereo (TWS), refer to *Bluetooth true wireless stereo (TWS)*, page 56.

6.2 Connecting the QuickSmart App for control

The QuickSmart App for tablets and smartphones is available for download from the Apple App Store and the Google Play Store.
To support EVOLVE G2 loudspeakers, QuickSmart 3.0 is required.
Download and check the app for the latest firmware updates to enjoy optimal audio performance and maximize your control of the system.

Notice!
The QuickSmart App is designed to only find loudspeakers from Electro-Voice featuring Bluetooth® control functionality.
The QuickSmart App does not display other types of Bluetooth® devices, e.g. phones, laptops, tablets, or headsets.

Prior to pairing the QuickSmart App with EVOLVE G2 loudspeakers:

- Make sure that Bluetooth® is enabled on the smartphone or tablet.

Notice!
For Android devices running Android version 11 or older, make sure that location services are allowed.

To connect the QuickSmart App for control:

1. Press and hold the input selection softkey to enable pairing mode.
   The message **HOLD FOR PAIRING** displays.

Portable column loudspeaker	Input selection softkey
EVOLVE 30M G2 and EVOLVE 50M G2	INPUT 7/8
EVOLVE 50 G2	INPUT 5/6

Table 6.2: Input selection softkeys to enable pairing mode

Notice!
The loudspeaker remains in control pairing mode for about five minutes. If control pairing fails, repeat step 1 or clean up your Bluetooth-paired devices list. Find more information and troubleshooting at: https://go.electrovoice.com/qsm

2. Wait until **BT PAIRING MODE ON** and the 4-digit ID display on the LCD.
3. Open the QuickSmart App.
   All available loudspeakers appear in the **Discovered Speakers** section.
4. Select the loudspeaker or loudspeakers you want to pair.
   The app supports pairing with up to six loudspeakers at a time.
5. Select **Connect**.
   Your mobile device's operating system prompts you to confirm the Bluetooth® pairing request.
6. Select **Pair and connect**.
   Your device then prompts you to synchronize with speaker.
7. Select **Synchronize**.
   The main control screen for a single loudspeaker or for the entire system, if multiple loudspeakers are connected, opens.

Notice!
Once connected the app checks for the latest firmware and provides an option to update or delay. Check in advance and update the firmware to the latest version.

7 Amplifier panel controls

The amplifier has a combination of controls and connectors to ensure the most versatile loudspeaker system.

7.1 EVOLVE 30M G2 and EVOLVE 50M G2

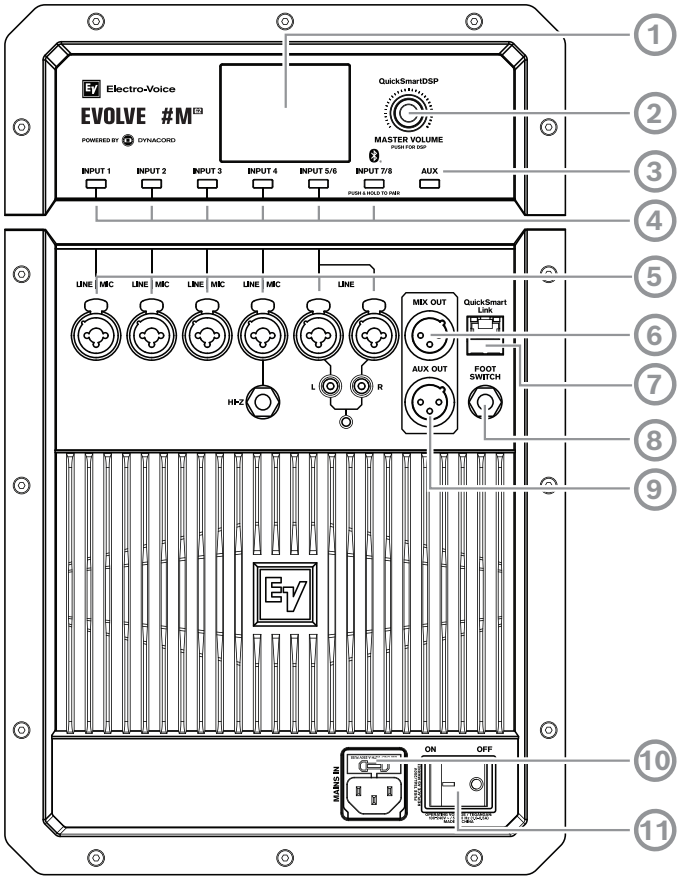

1. **LCD** – DSP control and monitoring interface.
2. **MASTER VOLUME** - Adjusts the sound level and navigates the DSP control menu.
   DSP - Scroll through the menu and select the available choices. Push the **MASTER VOLUME** knob to enter the DSP control menu.
3. **AUX** selection soft key - Press the soft key to select **AUX** channel and push the **MASTER VOLUME** knob to access the **AUX** menu.
4. **Input selection soft keys** - Press the soft key to select the input and push the **MASTER VOLUME** knob to access the input menu. Press the soft key a second time to deselect the input and return to the system status screen.
5. **INPUT connectors**

– **INPUT 1** to **INPUT 4** - Balanced input for the connection of signal sources like instruments, or microphones. Connections can be established using TRS or XLR connectors. The XLR connectors are separately switchable for 48V phantom power. **INPUT 4** includes a HI-Z input below the TRS/XLR combo plug for connection to a high impedance instrument output via a TS plug.
– **INPUT 5/6** - Stereo input for connection of stereo line level signals of sources like mixing consoles or DJ controllers. Connection is made using either two XLR-type, TRS, RCA, or a single 3.5 mm stereo connector.
– **INPUT 7/8 -** Stereo Bluetooth audio connection**.**

6. **MIX OUT** - The post-fader audio signals of INPUT 1 through INPUT 7/8 are mixed and passed to MIX OUT. When the level controls of INPUT 1 - INPUT 7/8 are adjusted, the volume change will be reflected at MIX OUT. This feature allows the loudspeaker to act as a basic eight-channel mixer that can send the mix to another loudspeaker via the MIX OUT socket. The output is configurable in the menu to provide either the Mixer Mono, Stereo left or Stereo right signal. In addition PRE or POST Master Volume and EQ are configurable. If QuickSmart Link is used, MIX OUT provides the same signal as the local column system.
7. **QuickSmart Link** - RJ45 connector for Cat5 cable to link two EVOLVE G2 systems together for digital audio and system control. With QuickSmart Link both speakers are controllable as one single mixer. The maximum recommended cable length is 100 m (328 ft).

Notice!
QuickSmart Link should only be used to connect two EVOLVE G2 systems. For information on compatibility and supported features, refer to *QuickSmart Link compatibility, page 91*.
QuickSmart Link is not an Ethernet/LAN port and is not compatible with network devices.

8. **FOOTSWITCH** - ¼-inch TRS connector for connecting 1-button footswitch with either TS or TRS connector to toggle FX on/off.
9. **AUX OUT** - The **AUX OUT** is configurable to provide two types of audio mixes:
   – Separate PRE or POST audio mix of INPUT 1 to INPUT 7/8. This audio mix is controlled by individual channel **AUX** levels via DSP. The FX mix can be added to this signal via **FX to AUX** control.
   – Main mix output signal. This audio mix is the same signal as the main mix (mono) which includes effects.
10. **MAINS IN** - The device receives its power supply via the MAINS IN socket. Only the provided power cord may be used. Connect the device only to a mains network that can handle 100 - 240 V AC, 50 - 60 Hz.
11. **POWER** - Switch for power **ON** or **OFF** of the loudspeaker. The LCD screen lights up when the power is turned **ON**, after approximately three seconds.

7.2 EVOLVE 50 G2

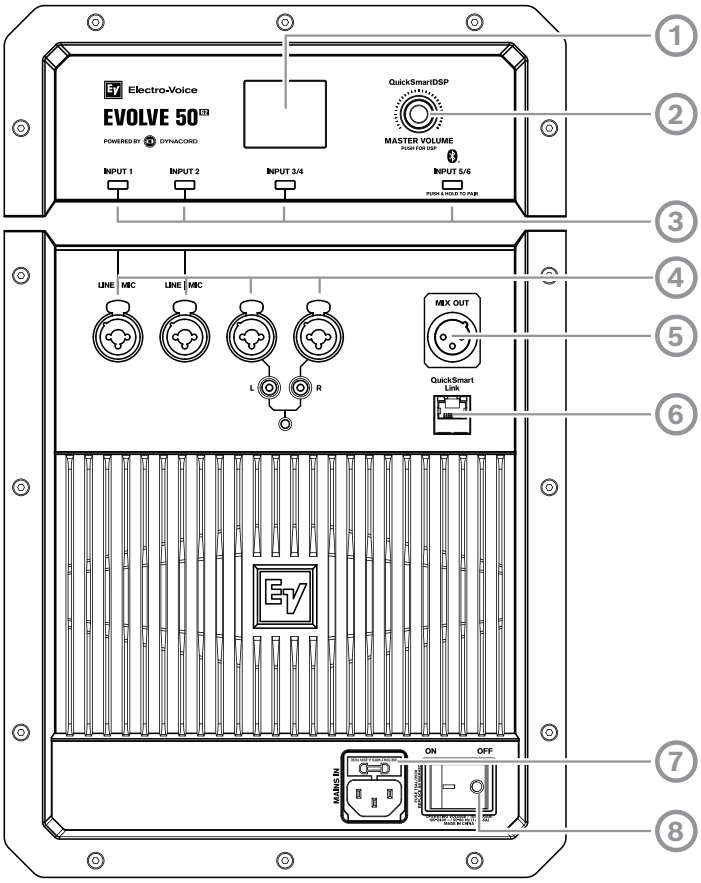

1. **LCD** – DSP control and monitoring interface.
2. **MASTER VOLUME** - Adjusts the sound level and navigates the DSP control menu.
   DSP - Scroll through the menu and select the available choices. Push the **MASTER VOLUME** knob to enter the DSP control menu.
3. **Input selection soft keys** - Press the soft key to select the input and push the **MASTER VOLUME** knob to access the input menu. Press the soft key a second time to deselect the input and return to the system status screen.
4. **INPUT connectors**

– **INPUT 1** and **INPUT 2** - Balanced INPUT for the connection of signal sources like instruments, or microphones. Connections can be established using TRS or XLR connectors. The XLR connectors for INPUT 1 and INPUT 2 are separately switchable for 48V phantom power.

– **INPUT 3/4** - Stereo INPUT 3/4 for connection of stereo line level signals of sources like mixing consoles or DJ controllers. Connection is made using either two XLR-type, TRS, RCA, or a single 3.5 mm stereo connector.

– **INPUT 5/6** - Stereo Bluetooth audio connection.

5. **MIX OUT** - The post-fader audio signals of INPUT 1 through INPUT 5/6 are mixed and passed to MIX OUT. When the level controls of INPUT 1 - INPUT 5/6 are adjusted, the volume change will be reflected at MIX OUT. This feature allows the loudspeaker to act as a basic six-channel mixer that can send the mix to another loudspeaker via the MIX OUT socket. The output is configurable in the menu to provide either the Mixer Mono, Stereo left or Stereo right signal. In addition PRE or POST Master Volume and EQ are configurable. If QuickSmart Link is used, MIX OUT provides the same signal as the local column system.

6. **QuickSmart Link** - RJ45 connector for Cat5 cable to link two EVOLVE G2 systems together for digital audio and system control. With QuickSmart Link both speakers are controllable as one single mixer. The maximum recommended cable length is 100 m (328 ft).

Notice!
QuickSmart Link should only be used to connect two EVOLVE G2 systems. For information on compatibility and supported features, refer to *QuickSmart Link compatibility*, *page 91*.
QuickSmart Link is not an Ethernet/LAN port and is not compatible with network devices.

7. **MAINS IN** - The device receives its power supply via the MAINS IN socket. Only the provided power cord may be used. Connect the device only to a mains network that can handle 100 - 240 V AC, 50 - 60 Hz.
8. **POWER** - Switch for power **ON** or **OFF** of the loudspeaker. The LCD screen lights up when the power is turned **ON**, after approximately three seconds.

8 System status indicators

8.1 EVOLVE 30M G2 and EVOLVE 50M G2

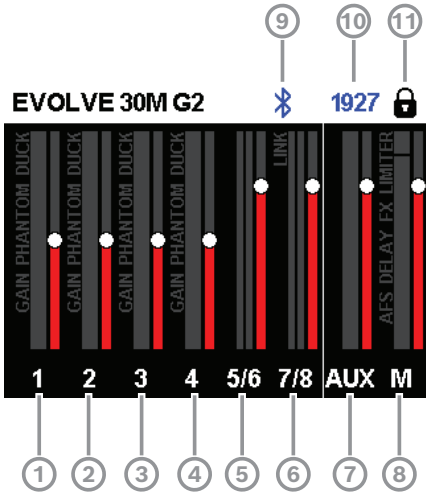

1. **1** - VU meter displays the signal level of INPUT 1 into the amplifier INPUT 1 connector.
– The display of **GAIN** indicates the manual gain is on.
– The display of **PHANTOM** indicates 48V phantom power is switched on.
– The display of **DUCK** indicates that the ducker feature was enabled on this channel to reduce all stereo input signals when INPUT 1 signal exceeds the configured threshold.
2. **2** - VU meter displays the signal level of INPUT 2 into the amplifier INPUT 2 connector.
– The display of **GAIN** indicates the manual gain is on.
– The display of **PHANTOM** indicates 48V phantom power is switched on.
– The display of **DUCK** indicates that the ducker feature was enabled on this channel to reduce all stereo input signals when INPUT 2 signal exceeds the configured threshold.
3. **3** - VU meter displays the signal level of INPUT 3 into the amplifier INPUT 3 connector.
– The display of **GAIN** indicates the manual gain is on.
– The display of **PHANTOM** indicates 48V phantom power is switched on.
– The display of **DUCK** indicates that the ducker feature was enabled on this channel to reduce all stereo input signals when INPUT 3 signal exceeds the configured threshold.
4. **4** - VU meter displays the signal level of INPUT 4 into the amplifier INPUT 4 connector.
– The display of **GAIN** indicates the manual gain is on.
– The display of **PHANTOM** indicates 48V phantom power is switched on.
– The display of **DUCK** indicates that the ducker feature was enabled on this channel to reduce all stereo input signals when INPUT 4 signal exceeds the configured threshold.
5. **5/6** - VU meter displays signal level of INPUT 5/6 into the amplifier INPUT 5/6 connector.
6. **7/8** - VU meter displays signal level of incoming Bluetooth audio signal.
– The display of **LINK** indicates an active TWS (True Wireless Stereo) audio connection with another TWS speaker such as EVOLVE G2, EVOLVE 70/90, EVERSE 8/12 or ZLX-G2.
7. **AUX** - VU meter displays the signal level of AUX signal.
8. **M** - VU meter displays the signal level of the main speaker output.
– The display of **AFS** indicates that the Automatic Feedback Supression functionality is enabled.
– The display of **DELAY** indicates that a system delay was set for this speaker (up to 100 meters / 328.1 feet).
– The display of **FX** indicates that an audio effect is active.
– The display fo **LIMITER** indicates that the limiter is active, which means that the output volume is too high.

9. Bluetooth® status display - Alternately shows the following:

– - Bluetooth status. The available options are:
Off - disabled
Solid - enabled

– - Bluetooth control app. The available options are:
Off - disconnected
Flashing - pairing mode
Solid - connected

– - Bluetooth audio streaming. The available options are:
Off - disconnected
Flashing - pairing mode (5 min)
Solid - connected

10. Loudspeaker 4-digit ID to pair via Bluetooth®.
11. **Status display** - Alternately shows the following:

– 1 - Indicates the selected preset number. There are five user-defined presets and one factory default preset available.

– 1E - Edited. Indicates the preset is not saved. When the preset is saved, the **E** is not displayed.

– - Indicates that the LCD display and controls are locked. Press the **MASTER VOLUME** knob or channel select soft key to unlock.

8.2 EVOLVE 50 G2

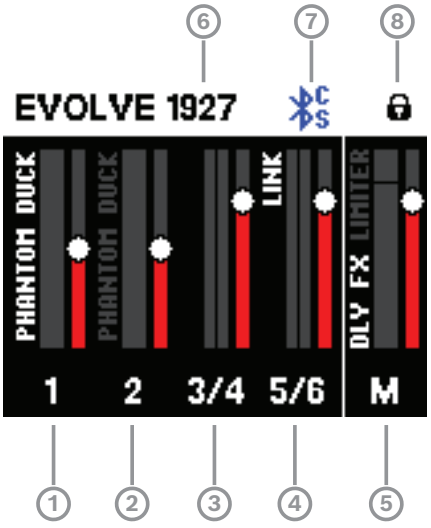

1. **1** - VU meter displays the signal level of INPUT 1 into the amplifier INPUT 1 connector.
– The display of **PHANTOM** indicates 48V phantom power is switched on.
– The display of **DUCK** indicates that the ducker feature was enabled on this channel to reduce all stereo input signals when INPUT 1 signal exceeds the configured threshold.
2. **2** - VU meter displays the signal level of INPUT 2 into the amplifier INPUT 2 connector.
– The display of **PHANTOM** indicates 48V phantom power is switched on.
– The display of **DUCK** indicates that the ducker feature was enabled on this channel to reduce all stereo input signals when INPUT 2 signal exceeds the configured threshold.
3. **3/4** - VU meter displays signal level INPUT 3/4 into the amplifier INPUT 3/4 connector.
4. **5/6** - VU meter displays signal level of incoming Bluetooth audio signal (maximum of left and right signal).

– The display of **LINK** indicates an active TWS (True Wireless Stereo) audio connection with another TWS speaker such as EVOLVE G2, EVOLVE 70/90, EVERSE 8/12 or ZLX-G2.

5. **M** - VU meter displays the signal level of the main speaker output.

– The display of **DLY** indicates that a system delay was set for this speaker (up to 100 meters / 328.1 feet).

– The display of **FX** indicates that an audio effect is active.

– The display fo **LIMITER** indicates that the limiter is active, which means that the output volume is too high.

6. Loudspeaker 4-digit ID to pair via Bluetooth®.

7. Bluetooth® status display - Alternately shows the following:

– - Bluetooth status. The available options are:
Off - disabled
Solid - enabled

– - Bluetooth control app. The available options are:
Off - disconnected
Flashing - pairing mode
Solid - connected

– - Bluetooth audio streaming. The available options are:
Off - disconnected
Flashing - pairing mode (5 min)
Solid - connected

8. **Status display** - Alternately shows the following:

– 1 - Indicates the selected preset number. There are five user-defined presets and one factory default preset available.

– 1E - Edited. Indicates the preset is not saved. When the preset is saved, the **E** is not displayed.

– - Indicates that the LCD display and controls are locked. Press the **MASTER VOLUME** knob or channel select soft key to unlock.

8.3 System protection limiters

System protection limiters indicate when a system is exceeding recommended usage by showing:

– **CLIP**
– **LIMITER**
– **AMP HOT!**

CLIP

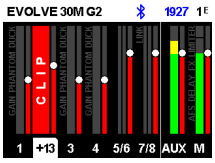

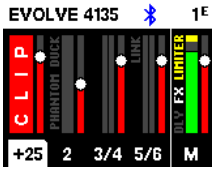

CLIP indicates that the audio source signal exceeded the maximum input level and is producing audio distortion. This results in rough and harsh audio output and can cause damage to the equipment.

If **CLIP** is shown:

- Reduce the **INPUT GAIN** and/or the audio source signal until **CLIP** stops showing.

LIMITER

LIMITER protects the loudspeaker from short-term peaks and long-term overload, which can cause distortion. When **LIMITER** is displayed on the screen, the limiter is active.

If the **LIMITER** indication is shown often or continuously:

- Reduce the output volume (**MASTER VOLUME**). This is strongly recommended.

AMP HOT!

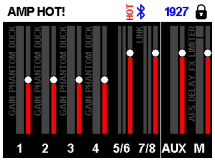

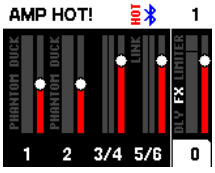

AMP HOT! indicates that the amplifier has heated up to a point where the loudspeaker will cut out or shut down.

If **AMP HOT!** is shown:

- Make sure the system is not in direct sunlight or near another heat source.
- Ensure that the system's airflow is not obstructed and that the rear panel is not covered.
- If possible, switch off the system and give it time to cool down.

After cooling down, if the system still displays **AMP HOT!**, contact your Sales or Customer Service Representative.

9 DSP control menu

An integrated DSP control menu allows the user to select multiple DSP system settings on the loudspeaker.

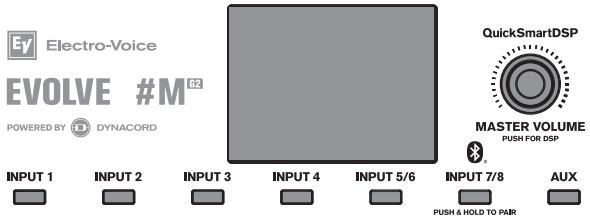

Figure 9.1: EVOLVE30M-G2, EVOLVE50M-G2

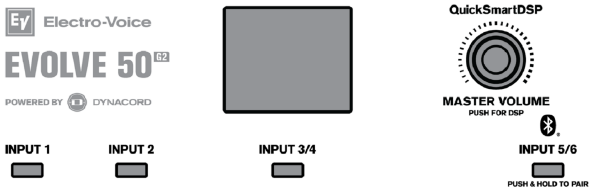

Figure 9.2: EVOLVE50-G2

Accessing the DSP control menu

To access the DSP control menu:

– **MAIN** menu - ensure no input selection soft key is selected.
– **AUX** menu - press the input selection soft key for **AUX**.

1. Push the **MASTER VOLUME** knob.
   The DSP control menu appears.
2. Using the **MASTER VOLUME** knob, scroll through the menu items.
3. Push the **MASTER VOLUME** knob to select the menu item you want to modify.
   The focus moves to the parameters on the right side of the DSP control menu.
4. Using the **MASTER VOLUME** knob, scroll through the parameters.
5. Push the **MASTER VOLUME** knob to confirm the selected parameter.
   The setting is saved. The focus returns to the menu items on the left side of the DSP control menu.
6. Repeat steps 2 through 5 to modify additional DSP and system settings.
7. Select **EXIT** to return to the home screen.

For complete EVOLVE G2 menu list, refer to *DSP control menu list, page 72*.

Notice!

The display returns to the home screen after 30 seconds of inactivity.

9.1 Main control menu

9.1.1 MODE control

The **MODE** control is used to configure the type of sound the loudspeaker delivers.
Available options for this selection are: **MUSIC**, **LIVE**, **SPEECH** and **CLUB**.

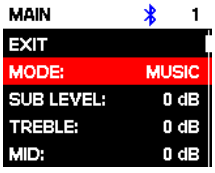

– **MUSIC** - is used for recorded music playback.
– **LIVE** – is used for live sound applications.
– **SPEECH** – is used for spoken word applications.
– **CLUB** - is used for recorded electronic music playback when more bass response is desired.

The default is **MUSIC**.

9.1.2 SUB LEVEL control

The **SUB LEVEL** control is used to adjust the volume of the subwoofer. The column is not affected by this setting.
The default is **0 dB**.

9.1.3 TREBLE/MID/BASS control

TREBLE control

The **TREBLE** control is used to adjust the high frequency performance of the loudspeaker for different applications or personal preference. The parameter controls a high shelving filter.
The default is **0 dB**.

MID control

The **MID** control is used to adjust the midrange frequency performance of the loudspeaker for different applications or personal preference.
The default is **0 dB**.

BASS control

The **BASS** control is used to adjust the low frequency performance of the loudspeaker for different applications or personal preference. The parameter controls a low shelving filter.
The default is **0 dB**.

9.1.4 MAIN EQ menu

MAIN EQ menu

The **MAIN EQ** menu is used to adjust the frequency response of the loudspeaker for different applications or personal preference.
The options are:

– **GEQ** - Graphic Equalizer that uses a fixed number of frequency bands.
▸ Use **GEQ** when you need fast, broad corrections, such as in live sound feedback on monitors.
– **PEQ**. - Parametric Equalizer that gives full control over each filter band.
▸ Use **PEQ** when you need precise shaping or targeted frequency cuts/boosts, such as in mixing, room tuning, detailed feedback removal.

The default is **GEQ**.

MAIN EQ menu (GEQ selected)

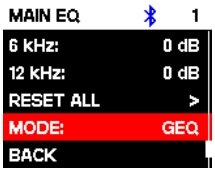

GEQ offers seven different EQ filters centered at the following frequencies:

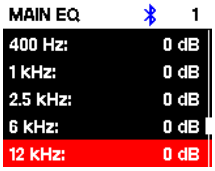

- 63 Hz
- 160 Hz
- 400 Hz
- 1.0 KHz
- 2.5 KHz
- 6.0 KHz
- 12 KHz.

The range of each filter is -12 dB to +12 dB. The default value for each filter is **0 dB**.

ENABLE ALL switches **ON** or **OFF** all filter bands.

RESET ALL sets all filter bands to **0 dB** (flat filter).

MAIN EQ menu (PEQ selected)

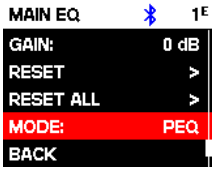

ENABLE ALL switches **ON** or **OFF** all filter bands.

PEQ# selects the filter band whose settings are actually shown and controlled.

FILTER ENABLE allows the user to switch **ON** or **OFF** the actual selected filter band (PEQ#).

TYPE

The **PEQ** mode offers five filter shape types to respond to different audio problems:

- **PEQ -** shapes the sound using peak/dip bell shaped filters which have three controls:
  - **Q** - Quality Factor defines the bandwidth of the filter. A lower **Q** provides a wider bandwidth and a higher **Q** provides a narrower bandwidth.
  - **FREQ** - selects the center frequency of the EQ filter.
  - **GAIN** - sets the amount of increase or reduction of the equalization filter.
- **LOW/HIGH SHELF** - shapes the sound using a shelving type filter that can be applied to the low frequency or high frequency response using two controls:
  - **FREQ** - sets the center frequency of the filter. For the **LOW SHELF** filter the **GAIN** of the filter tapers off above the frequency selected. For the **HIGH SHELF** filter the **GAIN** of the filter tapers off below the frequency selected.
  - **GAIN** - sets the amount of increase or reduction of the signal below or above the **FREQ** setting.
- **LOW/HIGH PASS** - pass band filters that shape the sound by only passing signal above or below the selected frequency using one control:

– **FREQ** - sets the corner frequency for the pass band filter. For **HIGH PASS** filters all frequencies above the selection will be passed through. Frequencies below the setting will be tapered off. For **LOW PASS** filters all frequencies below the selection will be passed through. Frequencies above the selection will be tapered off.

RESET sets the current filter band to its default settings (flat filter).
RESET ALL resets the EQ filters to factory settings.

9.1.5 DELAY control

DELAY delays the signal through the speaker system without affecting MIX OUT or AUX OUT signal. It is useful if the system is used e.g. as delay line system, which is placed further away from the stage.
The default is **OFF**.
You can choose to set delay in three different units of measurement:

– **METER**
– **FEET**
– **MILLISECONDS**

9.1.6 FX control

FX control offers 30 different audio effects. The default is **01**.
For the full list of available audio effects, refer to *FX on EVOLVE 50 G2 effects, page 90*.
The **FX** control is available in EVOLVE 50 G2 only.

FX1 and FX2 controls

FX1 and **FX2** controls offer 38 different audio effects. The default is **01**.
For the full list of available audio effects, refer to *FX1 and FX2 on EVOLVE 30M G2 and EVOLVE 50M G2, page 89*.
The **FX1** and **FX2** controls are available in EVOLVE 30M G2 and EVOLVE 50M G2.

FX ENABLE control

FX ENABLE switches the internal audio effects **ON** or **OFF**. In EVOLVE 30M G2 and EVOLVE 50M G2 both effects are switched with this setting in the same way.
If a footswitch is connected and it is set to **OFF**, the **FX ENABLE** setting in LCD cannot be changed because the footswitch has priority.
The default is **ON**.

9.1.7 AFS control

Notice!
AFS is available in EVOLVE 30M G2 and EVOLVE 50M G2. AFS is not available in EVOLVE 50 G2.

AFS (automatic feedback suppression) reduces unwanted feedback frequencies when microphones or instruments with pickups are used. Feedback occurs when sound from the loudspeaker enters the microphone or pickup and is amplified by the loudspeaker and played back again. High levels or extended periods of feedback can damage hearing and equipment.
Available options for this selection are **OFF** and **ON**.

9.1.7.1 Reducing feedback

To reduce feedback:

1. Set the loudspeaker and microphone or instrument according to your performance. Follow appropriate microphone placement and use practices:
   - Do not place the microphone directly in front of the loudspeaker. Refer to the user manual of your microphone to know the pickup and rejection patterns of your microphone.
   - Avoid placing music stands, tablets, or other large flat objects near the microphone such that they can cause audio reflections into the microphone.
   - Use proper microphone technique when speaking, singing or placing by an instrument to avoid using excessive input gain. For example, hold the microphone close to your mouth when performing.
   - Engage appropriate input channel **PRESET** for your application: **LOW CUT 80 Hz**, **LOW CUT 120 Hz**, **VOCAL MIC**, **VOICE FILTER**, **SPEECH**, **ACOUSTIC GUITAR**, etc.
   - Do not cup the microphone element with your hands while speaking or singing. Only hold the microphone by the handle or body as per the microphone manufacturer's recommendation.
2. Enable AFS in the DSP control menu or FX section of the QuickSmart App.
3. Slowly turn up the output of the loudspeaker, and begin sound checking your microphone or instrument.
4. As you hear feedback, allow a few seconds for the AFS to detect and to reduce the feedback.
5. Continue sound check until no additional feedback tones are generated.

9.1.8 SPEAKER OUT control

SPEAKER OUT is used to select which signal(s) should be delivered by the loudspeaker and which signal should be output at MIX OUT.

- **L + R** - The left and right signals of all inputs are summed. The sum is output at MIX OUT and is delivered by the loudspeaker (default).
- **L** - The panned left signal of all inputs is delivered by the loudspeaker. The right signal is **output** at MIX OUT.
- **R** - The panned right signal of all inputs is delivered by the loudspeaker. The left signal is output at MIX OUT.

9.1.9 MIX OUT control

The **MIX OUT** control is used to select which signal(s) should be output at **MIX OUT** and which signal should be delivered by the loudspeaker.

- **L+R** - The left and right signals of all inputs are summed. The sum is output at **MIX OUT** and is delivered by the loudspeaker (default).
- **L** - Only the panned left signal of all inputs is output at **MIX OUT**. The loudspeaker will deliver only the right signal.
- **R** - Only the panned right signal of all inputs is output at **MIX OUT**. The loudspeaker will deliver only the left signal.

Notice!

If QuickSmart Link is connected, **MIX OUT** and **SPEAKER OUT** deliver the same signal at each unit, depending on QuickSmart Link routing either **L**, **R** or **L+R**.

MIX OUT SETUP menu

Notice!
MIX OUT SETUP is available in EVOLVE 50 G2. **MIX OUT SETUP** is not available in EVOLVE 30M G2 and EVOLVE 50M G2.

MIX OUT SETUP sets the route and the level of the MIX OUT.
ROUTE control
Available options are:
- **PRE EQ -** delivers the MAIN MIX signal **without** MAIN EQ settings and is **independent of** MASTER VOLUME.
- **PRE FADER** - delivers the MAIN MIX signal **including** MAIN EQ settings and is **independent of** MASTER VOLUME.
- **POST FADER** - delivers the MAIN MIX signal **including** MAIN EQ settings and **follows** MASTER VOLUME.

The default is **PRE FADER**.
LEVEL control
LEVEL is used to adjust the volume of the MIX OUT signal.
The default is 0 dB.

MIX OUT ROUTING control

Notice!
MIX OUT ROUTING is available in EVOLVE 30M G2 and EVOLVE 50M G2. **MIX OUT ROUTING** is not available in EVOLVE 50 G2.

Available options are:
- **PRE EQ -** delivers the MAIN MIX signal **without** MAIN EQ settings and is **independent of** MASTER VOLUME.
- **PRE FADER** - delivers the MAIN MIX signal **including** MAIN EQ settings and is **independent of** MASTER VOLUME.
- **POST FADER** - delivers the MAIN MIX signal **including** MAIN EQ settings and **follows** MASTER VOLUME.

The default is **PRE FADER**.

MIX OUT LEVEL control

Notice!
MIX OUT LEVEL is available in EVOLVE 30M G2 and EVOLVE 50M G2. **MIX OUT LEVEL** is not available in EVOLVE 50 G2.

MIX OUT LEVEL is used to adjust the volume of the MIX OUT signal.
The default is 0 dB.

9.1.10 MANUAL GAIN control

Notice!
MANUAL GAIN is available in EVOLVE 30M G2 and EVOLVE 50M G2. **MANUAL GAIN** is not available in EVOLVE 50 G2.

MANUAL GAIN sets the relationship between level and gain of MIC/LINE inputs 1 to 4. Available options are:

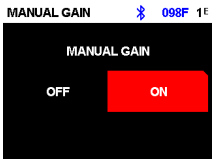

- **OFF**
- **ON**

When **MANUAL GAIN** is **OFF**, level and gain are adjusted at the same time with one single control. When you set the level, you are also affecting the gain. While you adjust the loudness, the device manages the gain relationship in the background.
With **MANUAL GAIN** off, level control ranges from -80 dB to +42 dB.

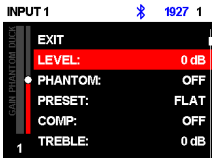

When **MANUAL GAIN** is **ON**, level and gain are adjusted separately.
With **MANUAL GAIN** on, level control ranges from -80 dB to +10 dB and gain control ranges from -10 dB to +42 dB.

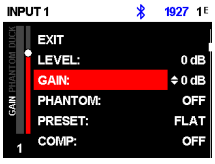

Changes to MANUAL GAIN setting also affect the AUX signal path.

MANUAL GAIN	AUX SEND
OFF	POST FADER
ON	POST FADER or PRE FADER

If you try to set **AUX SEND PRE FADER** while **MANUAL GAIN** is **OFF**, you will be asked to enable **MANUAL GAIN**.

If you try to disable **MANUAL GAIN** while **AUX SEND** is **PRE FADER**, you will be asked to set **AUX SEND** to **POST FADER**.

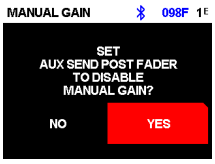

For more information on **AUX SEND**, refer to *AUX control menu, page 46*.

9.1.11 BLUETOOTH menu

The **BLUETOOTH** menu is used to set the Bluetooth® functionality of the loudspeaker.

ON/OFF - The **ON/OFF** menu controls whether Bluetooth® functionality is enabled or disabled on the loudspeaker.

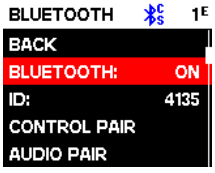

ID - **ID** shows the 4-digit unique device number. This is the number that identifies the loudspeaker to other Bluetooth-enabled devices.

CONTROL PAIR - The **CONTROL PAIR** menu is used to enable the QuickSmart App wireless control and monitoring application. Available options for this selection are: **CONTROL PAIR** or **CONTROL PAIRING**.

The default is **CONTROL PAIR**.

AUDIO PAIR - The **AUDIO PAIR** menu is used to stream audio from your Bluetooth® enabled device to the loudspeaker system. Available options for this selection are: **AUDIO PAIR** or **AUDIO PAIRING**.

The default is **AUDIO PAIR**.

9.1.12 LINK SPEAKERS function

LINK SPEAKERS allows two EVOLVE G2 loudspeakers to be linked over Bluetooth® in true wireless stereo for Bluetooth® audio streaming only.

Bluetooth true wireless stereo setup does not require other types of stereo connection, such as the ones provided by XLR cable or QuickSmart Link.

9.1.12.1 Linking speakers

To link two EVOLVE G2 loudspeakers via TWS:

- Pair one of the EVOLVE G2 loudspeakers via Bluetooth® to a mobile device.
  Refer to *Pairing Bluetooth® audio, page 19*.
- In both EVOLVE G2 loudspeakers, navigate to the **BLUETOOTH** menu in the Main DSP menu.

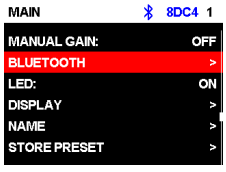

Notice!

To access the **MAIN** DSP control menu ensure no input selection soft key is selected and press the **MASTER VOLUME** knob.

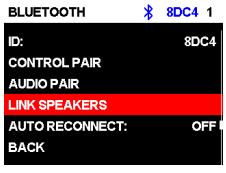

- In both EVOLVE G2 loudspeakers, select **LINK SPEAKERS**.

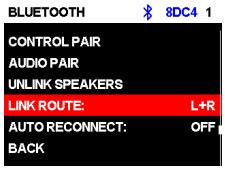

⇨ The LCD display will show **LINKING SPEAKERS...** while establishing connection between both EVOLVE G2 loudspeakers. When the connection is established, the menu will display **UNLINK SPEAKERS**.

⇨ In the **BLUETOOTH** menu below **UNLINK SPEAKERS**, the **LINK ROUTE** stereo channel selection will appear.

- Select the appropriate **LINK ROUTE** stereo channel selection for each EVOLVE G2 loudspeaker: **L+R** (mono), **L**, or **R**.

Notice!
With Bluetooth true wireless stereo (TWS) a mobile device can stream an audio signal to two loudspeaker systems. It is not possible to send input signals or the Mix of one EVOLVE G2 to another EVOLVE G2 system with this feature.

For more information on Bluetooth true wireless stereo (TWS) setup, refer to *Bluetooth true wireless stereo (TWS), page 56*.

9.1.13 AUTO RECONNECT function

AUTO RECONNECT allows to automatically connect your EVOLVE G2 to your audio streaming device when paired before. Both are switched on and Bluetooth is enabled. Available options for this selection are: **ON** or **OFF**.
Note: On EVOLVE 50 G2 this feature is called **RECONNECT** and the available options are **AUTO** and **OFF**.
The default is **OFF**.

9.1.14 LED control

The **LED** control shows power on and indicates limit. Available options for this selection are: **ON**, **OFF** or **LIMITER**.

- **ON** - turns the LED on when the power switch is set to ON.
- **OFF** - turns the LED off.
- **LIMITER** - turns the LED off under normal operation. The LED brief blinking indicates the limiter is activating. Short-term blinking is not critical because the integrated limiter keeps distortion under control. Constant blinking of the LED indicates the sound is negatively affected. If the LED is constantly blinking, check the rear LCD for more information. Reducing the output volume is strongly recommended.

The default is **ON**.

9.1.15 DISPLAY menu

PIN LOCK control

The **PIN LOCK** control locks the DSP control menu. Available options for this selection are: **OFF**, **TUNE** or **ALL**.

- **OFF** - turns the **PIN LOCK** off.
- **TUNE** - locks the INPUT control parameters but not the DSP control menu.

– **ALL** - locks all functions of the speaker.

The default is **OFF**.

9.1.15.1 Locking the DSP control menu

To lock the DSP control menu:

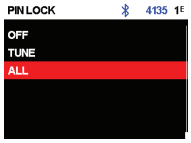

1. Select **TUNE** or **ALL**.

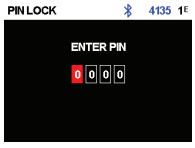

2. Enter a PIN code.

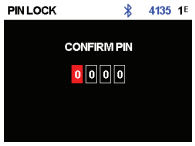

3. Re-enter the PIN code to confirm.
   If the PIN code does not match, it will set the **PIN LOCK** to **OFF**.
4. To lock the speaker select **LOCK NOW** from the **DISPLAY** menu.

The **PIN LOCK** will automatically engage after the speaker is power cycled.

To disable the **PIN LOCK**:

1. If not done already, unlock the device by entering the PIN code.
2. Deselect any input selection soft keys.
3. Push the **MASTER VOLUME** knob.
4. Using the **MASTER VOLUME** knob, scroll to **DISPLAY**.
5. Select **PIN LOCK**.
6. Select **OFF**.

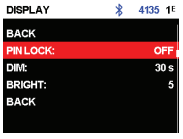

If you forget the PIN code, reset the loudspeaker to default settings.

To reset the loudspeaker to default settings:

- Press and hold the soft key for **INPUT 2** and **MASTER VOLUME** knob for at least 15 seconds.
  The **DEFAULT SETTINGS?** message appears.
- Select **YES**.
  The **ERASE USER PRESET...** message appears.

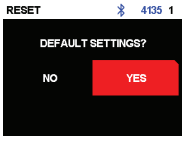

- Select **NO**.

9.1.16 DIM control

The **DIM** control is used to dim the display when the display is idle for the configured time. Available options for this selection are: **OFF, 10 to 60 seconds**.

The default is **30 seconds**.

9.1.17 BRIGHT control

BRIGHT is used to determine the brightness of the LCD.
The range is 1 (darkest) to 10 (brightest).
The default is **5**.

9.1.18 NAME command

NAME is used to assign a name to the loudspeaker.

9.1.18.1 Naming the loudspeaker

To assign a name to the loudspeaker:

1. Select **NAME**.
   ENTER SPEAKER NAME screen appears.
2. Use the **MASTER VOLUME** knob to enter the required name.
   The system allows a maximum of 18 characters.
3. Use the **MASTER VOLUME** knob to select **SAVE**.

9.1.19 STORE PRESET command

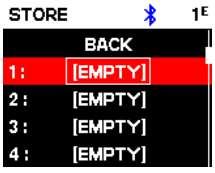

STORE PRESET allows you to create up to five customized user settings. Available options for this selection are: **BACK**, **1**, **2**, **3**, **4**, and **5**.

Notice!
The customized user setting name can contain a combination of alphanumeric characters including spaces. The alphanumeric character range is A to Z and 0 - 9.
The name field length is 12 characters.

9.1.19.1 Storing customized user settings

To store customized user settings:

- From the DSP control menu, scroll to **STORE PRESET.**
- Push the **MASTER VOLUME** knob to select **STORE PRESET**.
  The **STORE** screen appears.
- Push the **MASTER VOLUME** knob to select **1**.
  The **ENTER NAME FOR PRESET 1** screen appears.
- Use the **MASTER VOLUME** knob to scroll through the characters.
  The characters appear.
- Push the **MASTER VOLUME** knob to select the required character.
- Turn the **MASTER VOLUME** knob to move to the next character entry.
  Continue selecting characters until the required name is entered.
- Use the **MASTER VOLUME** knob to scroll to **SAVE**.
- Push the **MASTER VOLUME** knob to select **SAVE**.
- Repeat steps 3 through 8 to store additional customized user settings.
- Select **EXIT** to return to the home screen.
  Your saved preset will display in the **RECALL PRESET** menu.

9.1.20 RECALL PRESET command

RECALL PRESET allows you to retrieve up to five customized user settings. Available options for this selection are: **BACK**, **1**, **2**, **3**, **4**, and **5**. In addition, setting **6** is available to recall a default setting. This setting cannot be used to store user settings.

9.1.20.1 Recalling customized user settings

To recall customized user settings:

- From the DSP control menu, scroll to **RECALL PRESET.**
- Push the **MASTER VOLUME** knob to select **RECALL PRESET**.
  The **RECALL** screen appears.

1. Push the **MASTER VOLUME** knob to select the required preset.
2. Select **YES** to load the preset.
   The selected item is loaded.

- After the preset is loaded, the menu will return to the home screen.

9.1.21 RESET command

RESET is used to reset the loudspeaker to original factory settings. Available options for this selection are: **NO** or **YES**.

9.1.21.1 Resetting the system

To reset the system to original factory settings:

- From the DSP control menu, select **RESET**.
  The **DEFAULT SETTINGS?** message appears.

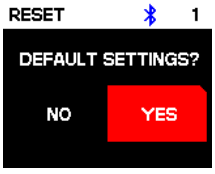

- Select **YES**.
  The **ERASE USER PRESETS?** message appears.
- Select **YES**.
  After the reset is complete, the menu returns to the home screen.

9.1.22 IMPRINT & LICENSE and INFO

IMPRINT & LICENSE menu item

IMPRINT & LICENSE includes additional regulatory and country-specific certification information, as well as the Open Source Software license text.

INFO menu item

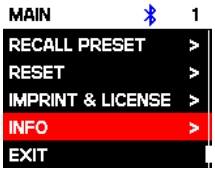

INFO is used to display the model, the firmware version, the Bluetooth version and the copyright.

9.2 Input DSP control menu

The loudspeaker INPUT DSP control menu selections are available for the EVOLVE G2 powered loudspeakers.
For complete EVOLVE 30M G2 and EVOLVE 50M G2 menu list, refer to *EVOLVE 30M G2 and EVOLVE 50M G2, page 78*.
For complete EVOLVE 50 G2 menu list, refer to *EVOLVE 50 G2, page 83*.

To control the mixer channels:

1. Press the input selection softkey to select the input channel.
   The softkey illuminates once selected.
2. Use the **MASTER VOLUME** knob to adjust the level.
3. Press the **MASTER VOLUME** knob to enter the input channel's DSP control menu.
4. Press the input selection soft key again to deselect the input channel for control.
   The soft key will no longer be illuminated.

INPUT control adjustments
Caution is advised when adjusting the **INPUT LEVEL** and EQ. Usually minor changes are sufficient to produce the best results in the overall sound.

To adjust the incoming sound:

- Set all EQ controls to **0 dB** or **FLAT**.
- Avoid setting the EQ controls to extreme positions.
- Use natural reproduction as a starting point.
- Rely on your musically trained ear.

9.2.1 LEVEL control

LEVEL adjusts the sensitivity of the incoming signals to the internal operation level of the mixer.
To achieve a good signal input level:

1. Set the volume to **MUTE** using the **MASTER VOLUME** knob.
2. Press the input selection soft key and use the **MASTER VOLUME** knob to set the **INPUT LEVEL** to **MUTE**.
3. Connect the sound source (microphone, instrument, etc) to the selected input.
4. Start the sound source at the highest volume level to be expected. Sing or speak as loudly as possible directly (close up) into the microphone.
5. While playing the sound source or singing into the microphone:
   - Increase the **LEVEL** by selecting the input channel using the input selection soft key and using the **MASTER VOLUME** knob, so that during the loudest part, the **PK** does not show. The VU-meter helps to set the correct level. Press the input selection soft key again to deselect the input channel.
   - Increase the **MASTER VOLUME** until you get the required output from the loudspeaker. This is the basic channel setting.

If further adjustments to the EQ setting of the channel are necessary, perform these steps again.
Changes in the sound shaping section also have an influence on the overall level of the channel.

9.2.2 GAIN control

GAIN sets the input sensitivity and headroom.

To set the **GAIN** level, **MANUAL GAIN** must be **ON**. If **MANUAL GAIN** is **OFF**, **GAIN** will not display in the input control menu.
You can adjust **GAIN** from -10 dB to +42 dB.
The default is 0 dB.

9.2.3 PHANTOM control

+48V DC phantom power is available on the XLR connector of the dedicated inputs.

Portable column loudspeaker	Input connector
EVOLVE 30M G2 and EVOLVE 50M G2	INPUT 1 to INPUT 4
EVOLVE 50 G2	INPUT 1 and INPUT 2

Table 9.1: Input connectors that enable phantom power

Phantom power can be used to power certain devices such as DI boxes and condenser microphones (non-electret). Consult the user manual of your device before using. There is no phantom power on the TRS connectors. Phantom power is switchable.

Notice!
Switch off phantom power (default) for sources which do not require phantom power such as dynamic microphones and mixer outputs. With phantom power already activated ensure to mute the input channel when connecting a microphone to avoid loud plop noise.

Notice!
Never connect a mobile device to a phantom power input connector with phantom power activated.

Phantom power is only available when INPUT LINK is OFF.

9.2.4 PRESET control

PRESET adjusts the EQ and compressor settings to provide a starting point for adjusting the sound for different input types.

Portable column loudspeaker	Input
EVOLVE 30M G2 and EVOLVE 50M G2	INPUT 1 to INPUT 4
EVOLVE 50 G2	INPUT 1 and INPUT 2

Table 9.2: Inputs that enable PRESET control

PRESET is only available when INPUT LINK is OFF.
For the full list of presets, refer to *EVOLVE 30M G2 and EVOLVE 50M G2, page 78* and *EVOLVE 50 G2, page 83*.

9.2.5 COMP control

COMP (compressor) controls the onboard compressor to adjust the input signal processing during operation.

Portable column loudspeaker	Input
EVOLVE 30M G2 and EVOLVE 50M G2	INPUT 1 to INPUT 4

Portable column loudspeaker	Input
EVOLVE 50 G2	INPUT 1 and INPUT 2

Table 9.3: Inputs that enable COMP control

- Use the **COMP** control to adjust the compressor threshold and the compression ratio simultaneously.

Adjusting the **COMP** control from 0 to 100 will result in the following:

– The gain below the threshold will increase from 0 dB to +6 dB.
– The compression ratio will increase from 1:1 to 8:1.
– The compressor will reduce the dynamic range of the audio signal proportional to the compressor setting.

Once the signal exceeds a certain threshold, the signal gets compressed. Major input level changes result in minor output level changes. Narrowing the dynamic range often allows for easier recording or mixing of the audio signal. It is recommended to start with low to moderate levels of compression (25 - 40) and increase slowly if necessary.

COMP is only available when **INPUT LINK** is **OFF**.

9.2.6 TREBLE/MID/BASS control

The EQ section of the input channel allows for a broad difference in the shaping of the incoming audio signal within three frequency bands:

– **TREBLE** control - provides cymbals and vocals with more treble for a more transparent sound.
– **MID** control - increasing this level provides higher output in the vocal range, reducing this level can help reduce acoustical feedback.

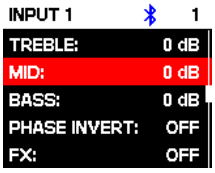

– **BASS** control - adds more “punch” to the sound of a kick drum or adds “body” to the vocals.

9.2.7 PHASE INVERT control

PHASE INVERT (also called phase reverse or polarity invert) flips the polarity of an audio signal by 180°, turning all positive waveform values negative and all negative values positive.

Flipping phase on one of two audio channels aligns their waveform and avoids cancellation or weak tone.

The default is OFF.

PHASE INVERT is only available when **INPUT LINK** is **OFF**.

Portable column loudspeaker	Input
EVOLVE 30M G2 and EVOLVE 50M G2	INPUT 1 to INPUT 4
EVOLVE 50 G2	INPUT 1 and INPUT 2

Table 9.4: Inputs that enable PHASE INVERT

9.2.8 FX control

FX1

FX1 determines how much of the channel’s signal is being sent to the FX1 effects processor.

The default is **OFF**.

FX2
FX2 determines how much of the channel's signal is being sent to the FX2 effects processor.
The default is **OFF**.

9.2.9 AUX control

AUX determines how much of the channel's signal is being sent to the AUX output.
The default is **OFF**.
AUX is only available when in the AUX control menu **AUX OUT ROUTING** is set to **AUX MIX**.

9.2.10 PAN/BAL control

The **PAN** (mono inputs) or **BAL** (stereo inputs) control adjusts the amount of the signal coming out of the stereo L or stereo R loudspeaker in a stereo setup. The **PAN/BAL** is not engaged for mono (single loudspeaker) setups.
PAN is only available when **INPUT LINK** is **OFF**.

9.2.11 DUCKER control

The ducker reduces the level of the signal(s) on all stereo inputs whenever a signal is detected at the selected MIC/LINE input.

Portable column loudspeaker	Input
EVOLVE 30M G2 and EVOLVE 50M G2	INPUT 1 to INPUT 4
EVOLVE 50 G2	INPUT 1 and INPUT 2

Table 9.5: Inputs that enable DUCKER setting

If no signal is detected at the selected MIC/LINE input, the level of the signal(s) on the stereo inputs will return to the previous set levels.
The **DUCKER** is useful to speak over background music:
- When signal is detected on the selected MIC input, the music on the stereo input channels will be reduced.
- When signal is no longer detected on the selected MIC input, the music will return to the previous level.

9.2.11.1 Engaging the ducker

To engage the ducker:
1. Press the dedicated input selection soft key.
2. Adjust the ducker level to set the detection threshold for the selected input channel. When signal is detected on the selected input, the signal on the stereo inputs will be reduced by 12 dB. Typical values are -10 to -20 dB.

Ducker operation logic
- The **DUCKER** setting is the detection threshold selected on the input channel.
- The reduced or ducked channels are the input signals that are reduced by 12 dB.

	INPUT 1	INPUT 2	INPUT 3	INPUT 4	Reduced channels
DUCKER setting	-1 dB - -40 dB	OFF	OFF	OFF	INPUT 5 to INPUT 8
	OFF	-1 dB - -40 dB	OFF	OFF	INPUT 5 to INPUT 8
	OFF	OFF	-1 dB - -40 dB	OFF	INPUT 5 to INPUT 8
	OFF	OFF	OFF	-1 dB - -40 dB	INPUT 5 to INPUT 8
	-1 dB - -40 dB	-1 dB - -40 dB	-1 dB - -40 dB	-1 dB - -40 dB	INPUT 5 to INPUT 8
	OFF	OFF	OFF	OFF	None

Table 9.6: DUCKER settings for EVOLVE 30M G2 and EVOLVE 50M G2

DUCKER is only available when **INPUT LINK** is **OFF**.

Notice!
If the inputs are linked, these channels are also ducked if a **DUCKER** setting was activated in one of the remaining unlinked channels.

	INPUT 1	INPUT 2	Reduced channels
DUCKER setting	-1 dB - -40 dB	OFF	INPUT 3 to INPUT 6
	OFF	-1 dB - -40 dB	INPUT 3 to INPUT 6
	-1 dB - -40 dB	-1 dB - -40 dB	INPUT 3 to INPUT 6
	OFF	OFF	None

Table 9.7: DUCKER settings for EVOLVE 50 G2

9.2.12 INPUT LINK control

INPUT LINK combines two mono MIC/LINE inputs into one single stereo LINE pair. Any parameter changes are applied simultaneously to both linked channels.
Available options are:

- **OFF - MIC/LINE inputs are independent of each other.**
- **ON** - two mono MIC/line inputs are linked to one stereo line input. The input DSP control menu will switch to line input mode. Refer to *INPUT 5/6, page 81*.

INPUT LINK is only available on **INPUT 1** and **INPUT 3** of EVOLVE 30M G2 and EVOLVE 50M G2.
For a block diagram with **INPUT LINK** enabled, refer to *Block diagram, page 68*.

9.2.13 NAME command

NAME is used to assign a name to the input.

9.2.13.1 Naming the input channel

To assign a name to the input:

1. Select **NAME**.
   ENTER INPUT NAME screen appears.

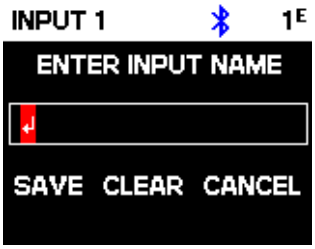

2. Use the **MASTER VOLUME** knob to enter the required name.
   The system allows a maximum of 12 characters.
3. Use the **MASTER VOLUME** knob to select **SAVE**.

9.3 AUX control menu

The AUX control menu is available on EVOLVE 30M G2 and EVOLVE 50M G2 only.

9.3.1 AUX LEVEL control

AUX LEVEL is used to adjust the volume of the AUX signal.
The default is 0 dB.

9.3.2 AUX EQ menu

AUX EQ is used to adjust the frequency response of the sound being sent through the AUX send.
The options are:

– **GEQ** - Graphic Equalizer that uses a fixed number of frequency bands.
▸ Use **GEQ** when you need fast, broad corrections, such as in live sound feedback on monitors.
– **PEQ**. - Parametric Equalizer that gives full control over each filter band.
▸ Use **PEQ** when you need precise shaping or targeted frequency cuts/boosts, such as in mixing, room tuning, detailed feedback removal.

The default is **GEQ**.
GEQ is a Graphic Equalizer and uses a fixed number of frequency bands. Use **GEQ** when you need fast, broad corrections, such as in live sound feedback on monitors.
PEQ is a Parametric Equalizer and gives full control over each filter band. Use **PEQ** when you need precise shaping or targeted frequency cuts/boosts, such as in mixing, room tuning, detailed feedback removal.

AUX EQ menu (GEQ selected)
GEQ offers seven different EQ filters centered at the following frequencies:

– 63 Hz
– 160 Hz
– 400 Hz
– 1.0 KHz
– 2.5 KHz
– 6.0 KHz
– 12 KHz.

The range of each filter is -12 dB to +12 dB. The default value for each filter is **0 dB**.

ENABLE ALL switches **ON** or **OFF** all filter bands.
RESET ALL sets all filter bands to **0 dB** (flat filter).

AUX EQ menu (PEQ selected)
ENABLE ALL switches **ON** or **OFF** all filter bands.
PEQ# selects the filter band whose settings are actually shown and controlled.
FILTER ENABLE allows the user to switch **ON** or **OFF** the actual selected filter band (PEQ#).
TYPE
The **PEQ** mode offers five filter shape types to respond to different audio problems:

- **PEQ -** shapes the sound using peak/dip bell shaped filters which have three controls:
  - **Q** - Quality Factor defines the bandwidth of the filter. A lower **Q** provides a wider bandwidth and a higher **Q** provides a narrower bandwidth.
  - **FREQ** - selects the center frequency of the EQ filter.
  - **GAIN** - sets the amount of increase or reduction of the equalization filter.
- **LOW/HIGH SHELF** - shapes the sound using a shelving type filter that can be applied to the low frequency or high frequency response using two controls:
  - **FREQ** - sets the center frequency of the filter. For the **LOW SHELF** filter the **GAIN** of the filter tapers off above the frequency selected. For the **HIGH SHELF** filter the **GAIN** of the filter tapers off below the frequency selected.
  - **GAIN** - sets the amount of increase or reduction of the signal below or above the **FREQ** setting.
- **LOW/HIGH PASS** - pass band filters that shape the sound by only passing signal above or below the selected frequency using one control:
  - **FREQ** - sets the corner frequency for the pass band filter. For **HIGH PASS** filters all frequencies above the selection will be passed through. Frequencies below the setting will be tapered off. For **LOW PASS** filters all frequencies below the selection will be passed through. Frequencies above the selection will be tapered off.

RESET sets the current filter band to its default settings (flat filter).
RESET ALL sets all filter bands to **0 dB** (flat filter).

9.3.3 AUX OUT ROUTING control

AUX OUT ROUTING sets the source of the signal sent to the physical AUX OUT jack on the mixer.
Available options are:

- **AUX MIX** - AUX OUT jack delivers a separate custom mix.
- **MAIN MIX** - AUX OUT jack mirrors the main stereo mix as a mono mix.

The default is AUX MIX.

9.3.4 AUX SEND control

AUX SEND routes customizable amount of audio to an auxiliary bus for monitors, effects, or alternate mixes.
Available options are:

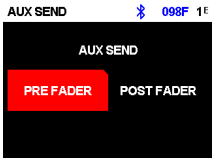

- **PRE FADER** - delivers the AUX MIX signal before the INPUT fader (volume adjustment). This means that the AUX output does not change when the INPUT LEVEL is adjusted, and the AUX level is independent of the main mix.

– **POST FADER** - delivers the AUX MIX signal after the INPUT fader (volume adjustment). This means that the AUX output follows the INPUT LEVEL, so changes in the main mix input level are reflected in the AUX MIX.

AUX SEND is only available when **AUX OUT ROUTING** is set to **AUX MIX**.

The setting of the **MANUAL GAIN** affects the AUX signal path.

MANUAL GAIN	AUX SEND
OFF	POST FADER
ON	POST FADER or PRE FADER

If you try to set **AUX SEND PRE FADER** while **MANUAL GAIN** is **OFF**, you will be asked to enable **MANUAL GAIN**.

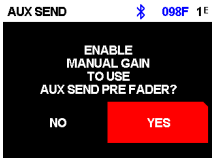

If you try to disable **MANUAL GAIN** while **AUX SEND** is **PRE FADER**, you will be asked to set **AUX SEND** to **POST FADER**.

9.3.5 FX TO AUX controls

FX1 TO AUX control

FX1 TO AUX adds the output of the FX1 effects processor to the AUX mix. The amount of effect added can be controlled in range -80dB to +10dB.

The default is **OFF**.

FX1 TO AUX is only available when **AUX OUT ROUTING** is set to **AUX MIX**.

FX2 TO AUX control

FX2 TO AUX adds the output of the FX2 effects processor to the AUX mix. The amount of effect added can be controlled in range -80dB to +10dB.

The default is **OFF**.

FX2 TO AUX is only available when **AUX OUT ROUTING** is set to **AUX MIX**.

10 Recommended configurations

10.1 Stereo pair using XLR cable

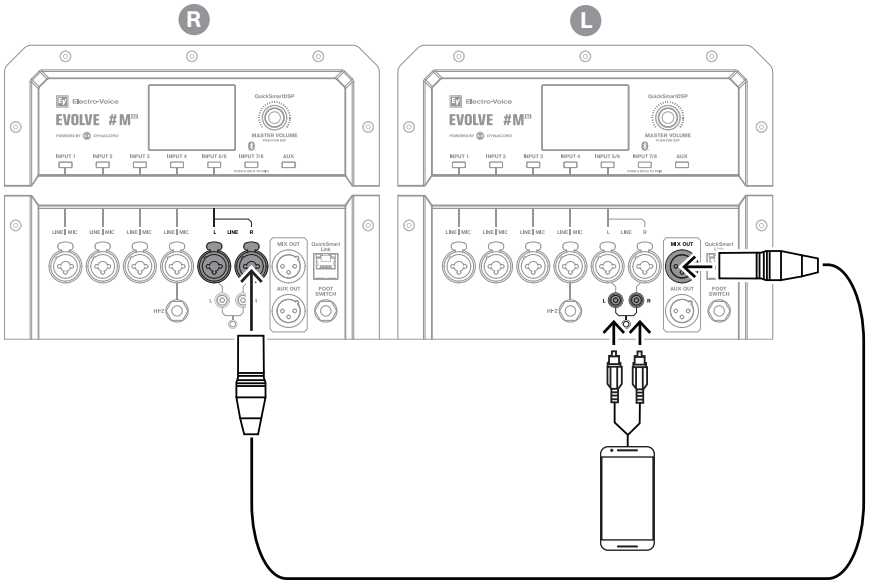

Figure 10.1: Setting up EVOLVE 30M G2 and EVOLVE 50M G2 for stereo configuration

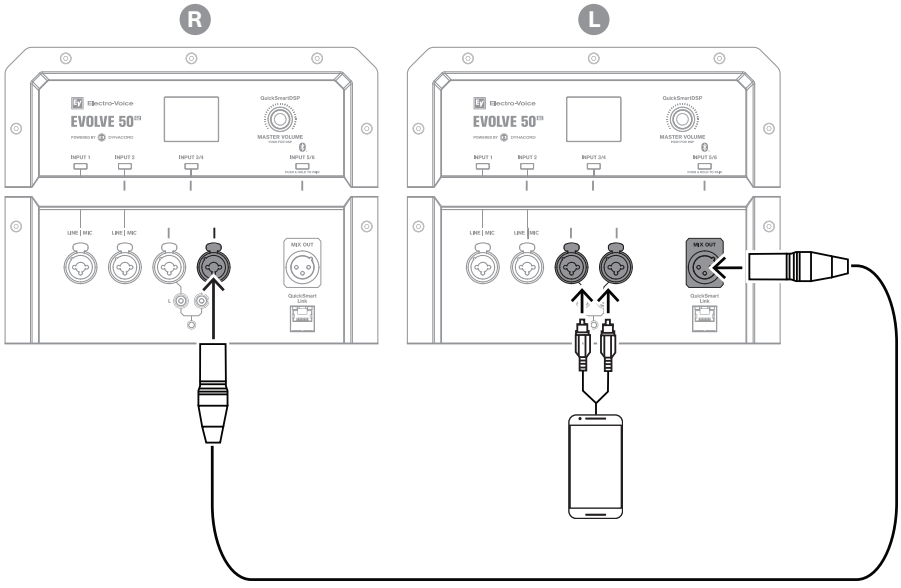

Figure 10.2: Setting up EVOLVE 50 G2 for stereo configuration

	EVOLVE 30M G2 EVOLVE 50M G2	EVOLVE 50 G2
MODE	MUSIC	
MASTER SPEAKER (L) MIX OUT	R	
SATELLITE SPEAKER (R)	**INPUT 5/6** (MONO)	**INPUT 3/4** (MONO)

Table 10.1: DSP settings for stereo pair of EVOLVE G2 systems

Notice!
Stereo connection from device to MASTER SPEAKER can be made with hard wires into the stereo inputs or via Bluetooth® into stereo Bluetooth® inputs.

10.2 Stereo pair using QuickSmart Link

To set up a stereo system using QuickSmart Link:

- Connect an RJ45 cable into the QuickSmart Link connectors of both systems.

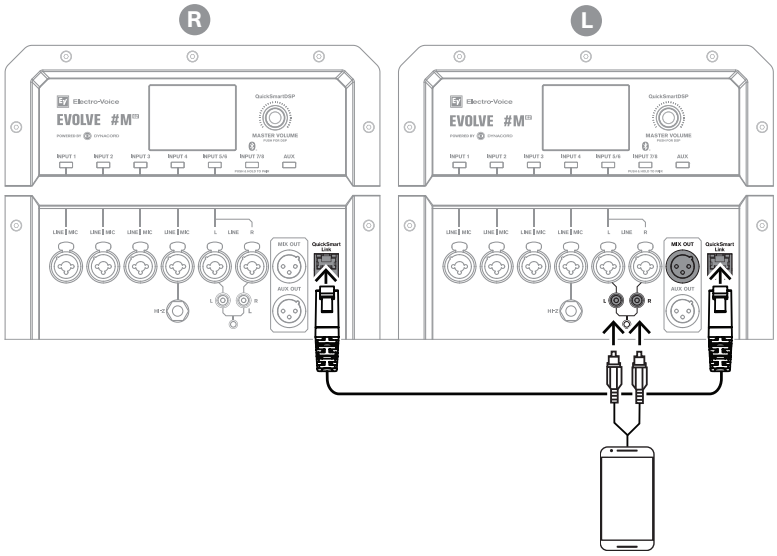

Figure 10.3: Setting up EVOLVE 30M G2 and EVOLVE 50M G2 for stereo pair using QuickSmart Link

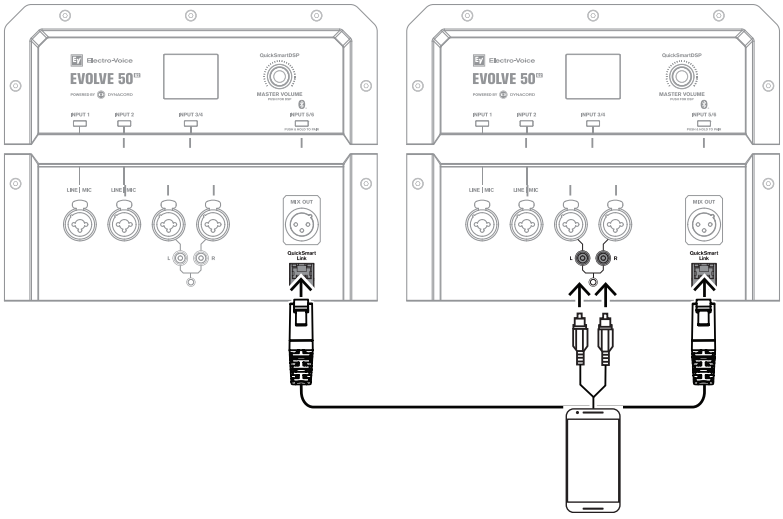

Figure 10.4: Setting up EVOLVE 50 G2 for stereo pair using QuickSmart Link

⇨ The system detects the QuickSmart Link connection. You can now control speaker parameters of both systems from one screen.

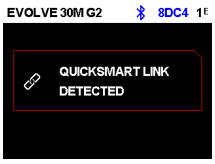

⇨ Once connected, the system prompts you to sync parameters. This happens when the parameters of the connected systems do not match.

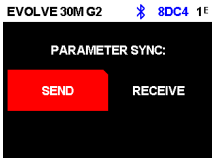

If the parameters are already matching, for example, after both unit factory reset, no prompt will be shown. For a full list of the parameters synced over QuickSmart Link for the EVOLVE and EVOLVE G2, refer to *Parameters synced over QuickSmart Link*, page 91.

- Select **SEND** or **RECEIVE**.
  Either option affects the systems accordingly. Selecting **SEND** on one system enables **RECEIVE** on the other system.

⇨ Once the parameters are synced, the system prompts you to select which system is **Stereo Left** and which system is **Stereo Right**.

- Select **STEREO L** or **STEREO R**.
  As when syncing parameters, either option affects the systems accordingly. Selecting **STEREO L** on one system will enable **STEREO R** on the other system.

⇨ Your QuickSmart Link setup is now ready.

⇨ When a QuickSmart Link connection is active, an icon displays in the top ribbon of the DSP screen.

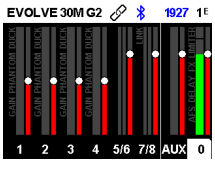

10.3 DJ performance

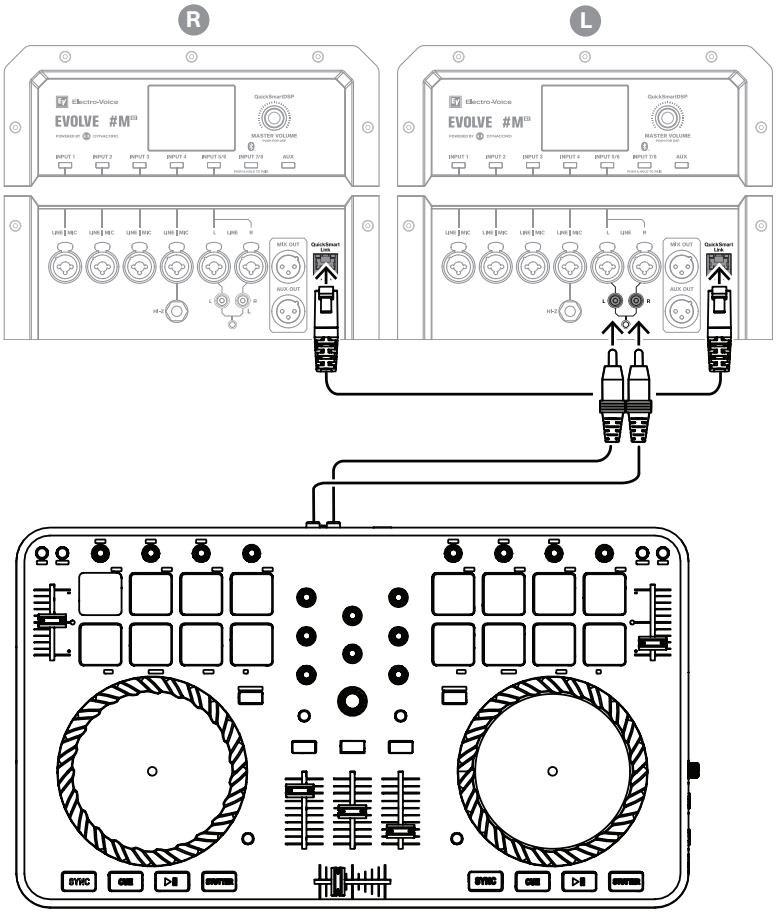

Figure 10.5: Setting up EVOLVE 30M G2 and EVOLVE 50M G2 for DJ performance

MODE	MUSIC
MASTER SPEAKER (L) SPEAKER OUT	L
SATELLITE SPEAKER (R) SPEAKER OUT	R

Table 10.2: DSP settings for DJ performance

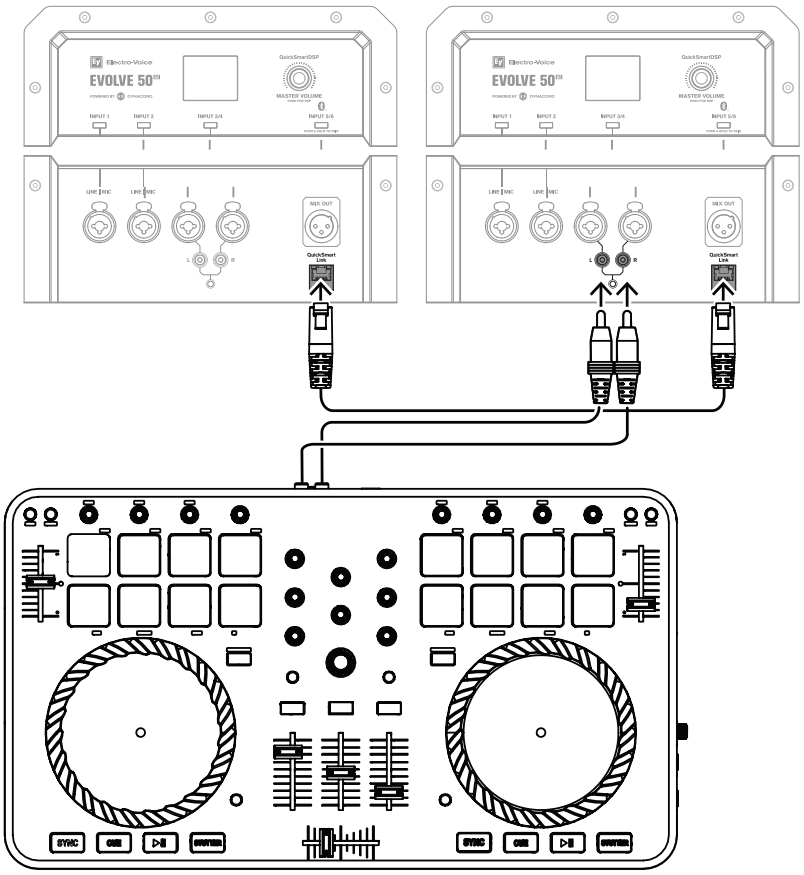

Figure 10.6: Setting up EVOLVE 50 G2 for DJ performance

MODE	MUSIC
MASTER SPEAKER (L) SPEAKER OUT	L
SATELLITE SPEAKER (R) SPEAKER OUT	R

Table 10.3: DSP settings for DJ performance

10.4 Solo musician performance

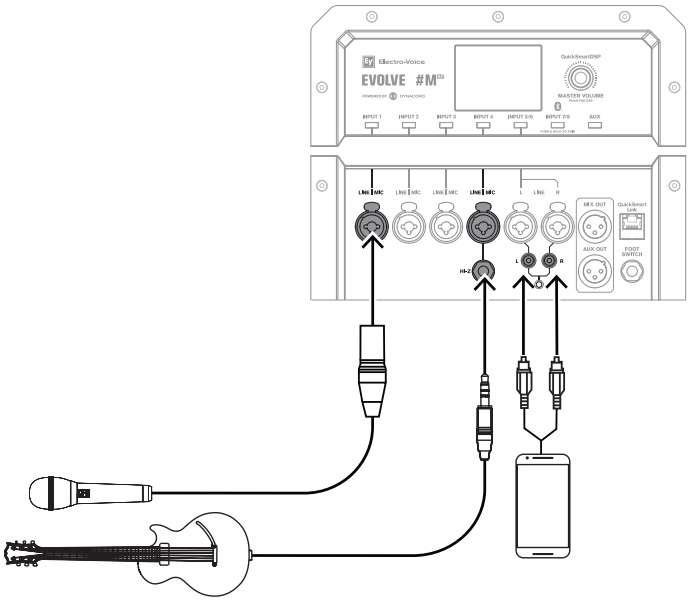

Figure 10.7: Setting up EVOLVE 30M G2 or EVOLVE 50M G2 for solo musician performance

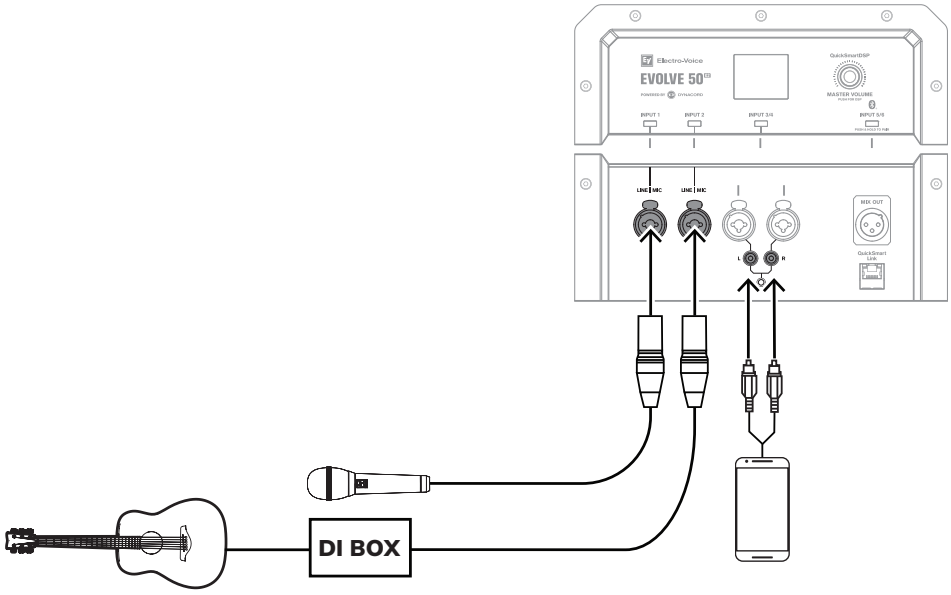

Figure 10.8: Setting up EVOLVE 50 G2 for solo musician performance.

Notice!
The direction of the arrow indicates the signal path.

MODE	**LIVE**

Table 10.4: DSP settings for solo musician performance

10.5 Speaking event

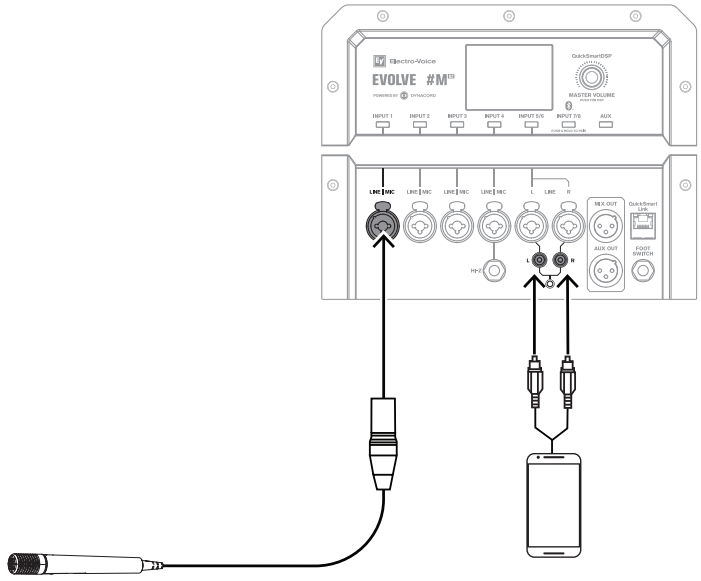

Figure 10.9: Setting up EVOLVE 30M G2 and EVOLVE 50M G2 for a speaking event

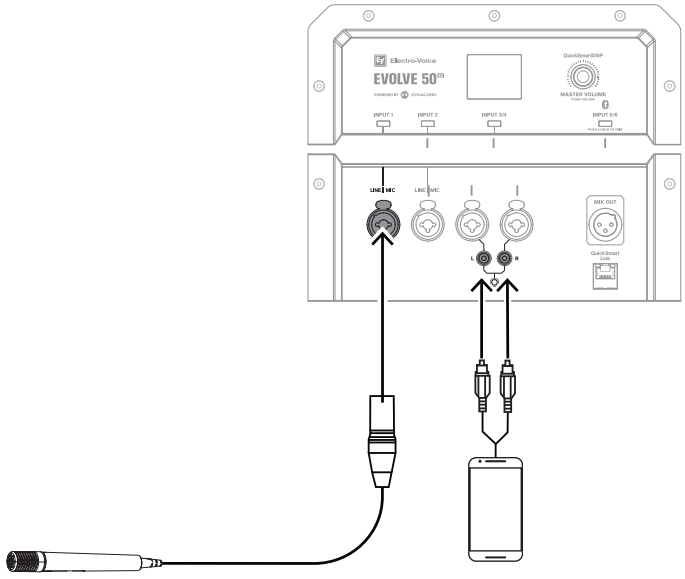

Figure 10.10: Setting up EVOLVE 50 G2 for a speaking event

Notice!
The direction of the arrow indicates the signal path.

MODE	**SPEECH**

Table 10.5: DSP settings for speaking event

10.6 Bluetooth true wireless stereo (TWS)

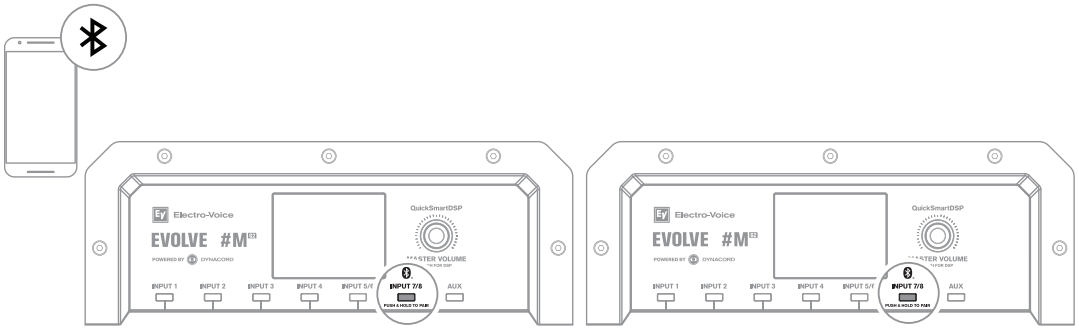

Figure 10.11: Setting up EVOLVE 30M G2 and EVOLVE 50M G2 for Bluetooth TWS

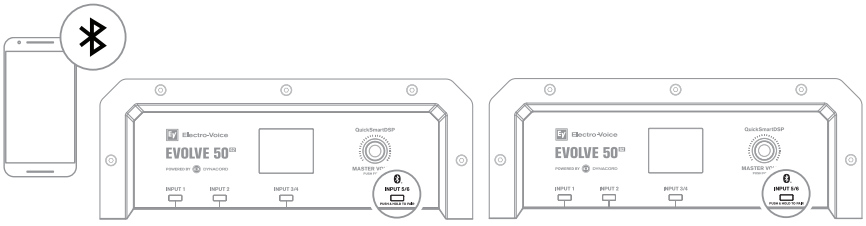

Figure 10.12: Setting up EVOLVE 50 G2 for Bluetooth TWS

MODE	**MUSIC**

Table 10.6: DSP settings for Bluetooth TWS

To link two EVOLVE G2 loudspeakers via TWS:

- Pair one of the EVOLVE G2 loudspeakers via Bluetooth® to a mobile device.
  Refer to *Pairing Bluetooth® audio, page 19*.
- In both EVOLVE G2 loudspeakers, navigate to the **BLUETOOTH** menu in the Main DSP menu.

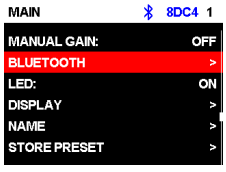

Notice!
To access the **MAIN** DSP control menu ensure no input selection soft key is selected and press the **MASTER VOLUME** knob.

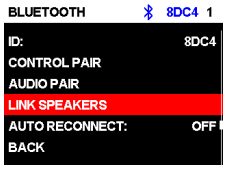

- In both EVOLVE G2 loudspeakers, select **LINK SPEAKERS**.

⇨ The LCD display will show **LINKING SPEAKERS...** while establishing connection between both EVOLVE G2 loudspeakers. When the connection is established, the menu will display **UNLINK SPEAKERS**.

⇨ In the **BLUETOOTH** menu below **UNLINK SPEAKERS**, the **LINK ROUTE** stereo channel selection will appear.

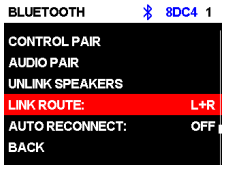

- Select the appropriate **LINK ROUTE** stereo channel selection for each EVOLVE G2 loudspeaker: **L+R** (mono), **L**, or **R**.

Notice!
With Bluetooth true wireless stereo (TWS) a mobile device can stream an audio signal to two loudspeaker systems. It is not possible to send input signals or the Mix of one EVOLVE G2 to another EVOLVE G2 system with this feature.

10.7 Stereo with additional subwoofer using XLR cable

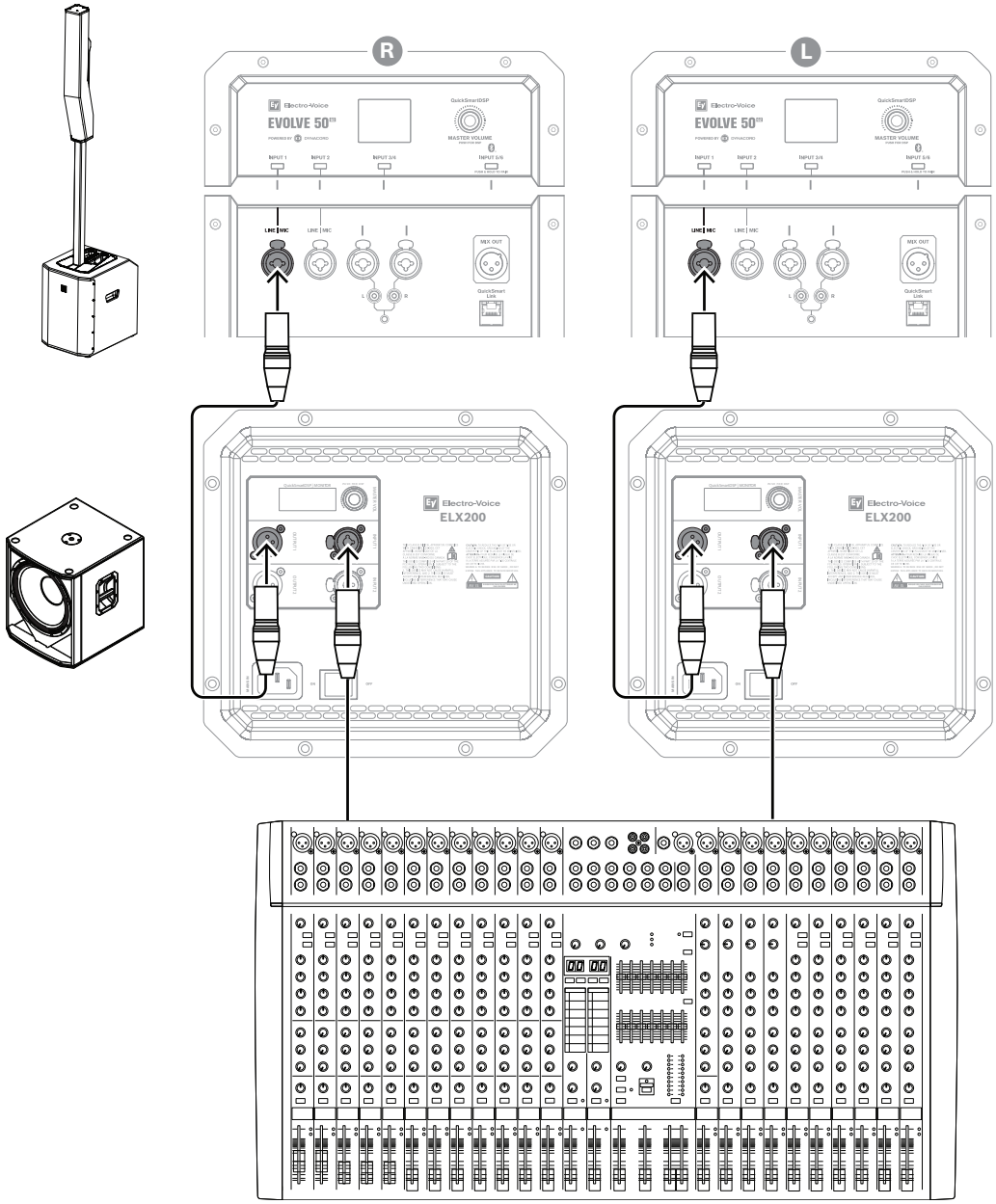

Figure 10.13: Setting up EVOLVE 50 G2 for stereo with additional subwoofer using XLR cable

	EVOLVE 50 G2	ELX200-18SP
PRESET	LOW CUT 80 Hz	n/a
PHANTOM	OFF	n/a
X-OVER	n/a	80 Hz

Table 10.7: DSP settings for stereo pair of EVOLVE G2 systems with additional subwoofer

10.8 Stereo mains with monitor

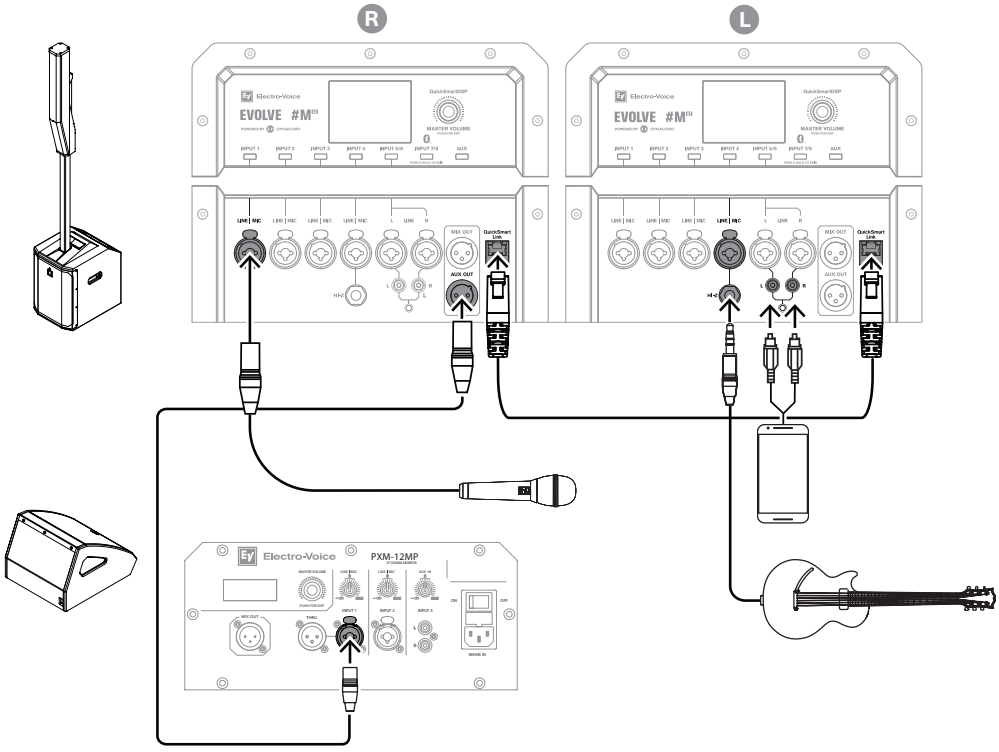

Figure 10.14: Setting up EVOLVE 30M G2 and EVOLVE 50M G2 for stereo mains with monitor

	EVOLVE 30M G2 EVOLVE 50M G2	PXM-12MP
MODE	MUSIC or LIVE	MONITOR 1 or MONITOR 2

Table 10.8: DSP settings for stereo pair of EVOLVE G2 systems with PXM-12MP

11 Troubleshooting

Problem	Possible cause	Action
1. No sound	Amplifier	Verify all the electronics are on, the signal routing is correct, the source is active; the volume is turned up, no channels are muted, etc. Correct/repair/ replace as necessary. If there is still no sound, the problem may be wiring.
	Wiring	Verify you have connected the correct cables to the amplifier. Play something at a low level through the amplifier. Connect a test loudspeaker in parallel with the malfunctioning line. If the sound level is gone or is very weak, the line has a short in it (possibly a severe scrape, pinch, or a missed connection). Using the test loudspeaker, move down the line and test each connection/junction until you find the problem and correct it. Observe proper polarity.
2. Intermittent output such as crackling or distortion	Faulty connection	Check all connections at amplifier and loudspeakers to ensure they are all clean and tight. If the problem persists, check the wiring. See problem 1.
3. Constant noise such as buzzing hissing or humming	Defective source or other electronic device	If noise is present, but no program material is playing, evaluate each component as necessary to isolate the problem. Most likely there is a break in the signal path.
	Poor system grounding or ground loop	Check and correct the system grounding, as required.
4. No sound produced with microphone connected to line/mic inputs	Microphone requires phantom power.	Ensure the microphone is connected to a line/mic XLR input. Ensure that PHANTOM is set to **ON** in this channel. Phantom power is not available on line inputs and line/mic TRS input connector.
	Input channel is muted or LEVEL is too low.	Select the channel and verify the channel is not muted. If it is not muted, slowly increase the channel LEVEL until sound is produced.
5. Sound is distorted, front LED is OFF, LCD screen **LIMITER** is ON	Excessive input level	Reduce the input level or loudspeaker level to prevent limit.
	Incorrect gain structure or source input (mixing console/preamp) is overdriven	Verify level controls of the source are properly structured by using the VU meter indicator on the LCD screen. If the VU meter bar is solid or the system indicates **CLIP** or **LIMITER**, the input or source level is too high.

Problem	Possible cause	Action
6. Microphone produces acoustic feedback when input level is amplified	Incorrect gain structure	Reduce the microphone signal by reducing the input level. Positioning the microphone close to the sound source increases gain before feedback.
	MODE is set to **MUSIC**	Change the **MODE** to **LIVE** or **SPEECH**.
	Microphone position is too close to the front of the loudspeaker	Whenever possible, setup the loudspeakers so the microphone is behind them. If using a separate loudspeaker in a monitor position, aim the loudspeaker to the back of the microphone.
7. DSP control menu is locked	The menu **LOCK** function has been turned on. A lock symbol displays on the LCD screen.	Press the **MASTER VOLUME** knob or input selection soft keys to unlock.
8. QuickSmart App does not detect the loudspeaker	Bluetooth® disabled	Enable Bluetooth® on both your device and speaker.
	Outdated app version	– Update the app to the latest version. – Ensure automatic updates are enabled.
	Speaker not in pairing mode	Activate the pairing mode on your speaker.
	Factory reset removed security keys	If the speaker was factory reset, previously stored security keys have been deleted. – Forget the speaker on your mobile device (iOS) – Pair the speaker again as a new device.
	Location services disabled (Android 11 and below)	On Android 11 or earlier, Bluetooth® scanning requires Location Services to be enabled. – Enable Location Services on your Android device.
	Battery optimization or energy saving settings (Android)	Go to **Settings** > **Apps** > **QuickSmart** > **Battery** and select **Not restricted**.
	Too many active Bluetooth® connections	– Check how many devices are connected via Bluetooth®. – Forget unused devices in the Bluetooth® menu and re-pair the speaker. – Keep only one Bluetooth-controlled connection per speaker at a time. – Be mindful of environments with heavy Bluetooth® traffic.
	App permissions for detecting nearby devices disabled	Go to **Settings** > **Apps** > **QuickSmart** > **Permissions** and enable the required permissions.

Problem	Possible cause	Action
	Pairing multiple speakers at the same time	Pairing multiple speakers simultaneously can cause Bluetooth connection issues, especially on Android devices. The operating system may become confused when handling multiple pairing requests at once. – Pair speakers one at a time, completing each pairing before starting the next. – Avoid initiating multiple Bluetooth pairings in parallel.
	Device in **Do Not Disturb** mode	If the device is in **Focus** - **Do Not Disturb** mode (iOS) or **Do Not Disturb** mode (Android), Bluetooth pairing dialog boxes may not appear on the screen. – Open the Notification Center on the device to check for hidden Bluetooth pairing dialog boxes. – Disable **Focus** - **Do Not Disturb** mode (iOS) or **Do Not Disturb** mode (Android), then try pairing the speaker again.
9. PIN code unlock not successful	Incorrect PIN code entered	– Retry PIN code entry – Press and hold the soft key for **INPUT 2** and **MASTER VOLUME** knob for at least 15 seconds to reset the loudspeaker to default settings.
10. Inputs not sent over TWS	True Wireless Stereo (TWS) streams Bluetooth® audio simultaneously to two loudspeakers from a single Bluetooth® audio source. TWS does not stream analog inputs from one loudspeaker to another.	For stereo operation which includes analog inputs, stream Bluetooth® to a single EVOLVE system and connect them using QuickSmart Link (QSL).
11. Sound is distorted or interrupted if using QuickSmart Link	Improper cable or cable that is too long	Use shielded CAT5 (or better) cables that are not longer than 100 m (328 ft).
	Network hardware (Switches / Routers) connected	Only a direct connection between no more than two EVOLVE G2 systems is allowed to work correctly.
12. No audio effect	FX disabled	Make sure the **FX ENABLE** control is set to **ON** in LCD or app. If changing to **ON** is not possible a footswitch is connected and set to OFF.

Problem	Possible cause	Action
	No effect selected	If **FX ENABLE** is **ON** but still no audio effect hearable, check if an effect program different to 00: Off is selected.
	Send channel to FX	Check if in the related input channel the FX, FX1 or FX2 control is set to a value different to OFF. Increase level slowly to add more effect to your mix.

If these suggestions do not solve your problem, contact your nearest Electro-Voice dealer or Electro-Voice distributor.

12 Technical data

	EVOLVE 30M G2
Column	(6) 2.8-inch neodymium drivers
Subwoofer	(1) 10-inch woofer
Frequency response (-3 dB) (Hz)[1]	51 Hz – 20,000 Hz
Frequency range (-10 dB) (Hz)[1]	45 Hz – 20,000 Hz
Maximum sound pressure level at a distance of 1 m (dB)[2]	125 dB
Coverage angle HxV (°)	120° x 40°
Amplifier rating (W)	1500 W
Power consumption (V, Hz, A)[3]	100 - 240 VAC, 50 - 60 Hz, 1.0 - 0.5 A
LF channel rating (W)	800 W
HF channel rating (W)	700 W
Crossover frequency (Hz)	200 Hz
Connector type	(4) XLR/TRS combo jack mic / line inputs with switchable 48V phantom power ¼-inch Hi-Z input XLR/TRS combo jack stereo line input Stereo RCA line input 3.5 mm stereo jack input XLR Mix out XLR Aux out RJ45 QuickSmart Link connector Bluetooth Stereo input with TWS ¼-inch footswitch control jack input
Enclosure	Plywood with polyurea coating (subwoofer) Composite (column) Aluminum (pole)
Grille material	Steel with black or white powder coat
Color	Black or white
Dimensions (H x W x D) (in)	16.73 in x 13.07 in x 17 in (subwoofer) 24.41 in x 3.74 in x 6.21 in (column) 23.64 in x 1.91 in x 2.17 in (each pole half)
Dimensions (H x W x D) (mm)	424.85 mm x 332 mm x 432 mm (subwoofer) 620 mm x 95 mm x 157.7 mm (column) 600.5 mm x 48.5 mm x 55 mm (each pole half)
Assembled dimensions (H x W x D) (in)	78.54 in x 13.07 in x 17.01 in
Assembled dimensions (H x W x D) (mm)	1995 mm x 332 mm x 432 mm
Shipping dimensions (H x W x D) (in)	28.11 in x 15.75 in x 23.62 in

	EVOLVE 30M G2
Shipping dimensions (H x W x D) (mm)	714 mm x 400 mm x 600 mm
Weight (lb)	43.54 lb (assembled system) 34.6 lb (subwoofer) 5.6 lb (column) 3 lb (each pole half)
Weight (kg)	19.75 kg (assembled system) 15.7 kg (subwoofer) 2.7 kg (column) 1.4 kg (each pole half)
Shipping weight (lb)	54.34 lb
Shipping weight (kg)	24.65 kg

[1]Full-space measurement using **MUSIC** DSP preset.
[2]Maximum SPL is measured at 1 m using broadband pink noise at maximum output.
[3]Current rating is 1/8 power.

	EVOLVE 50M G2
Column	(8) 3.5-inch neodymium drivers
Subwoofer	(1) 12-inch woofer
Frequency response (-3 dB) (Hz)[1]	43 Hz – 20,000 Hz
Frequency range (-10 dB) (Hz)[1]	37 Hz – 20,000 Hz
Maximum sound pressure level at a distance of 1 m (dB)[2]	129 dB
Coverage angle HxV (°)	120° x 40°
Amplifier rating (W)	1500 W
Power consumption (V, Hz, A)[3]	100 - 240 VAC, 50 - 60 Hz, 1.0 - 0.5 A
LF channel rating (W)	800 W
HF channel rating (W)	700 W
Crossover frequency (Hz)	200 Hz
Connector type	(4) XLR/TRS combo jack mic / line inputs with switchable 48V phantom power ¼-inch Hi-Z input XLR/TRS combo jack stereo line input Stereo RCA line input 3.5 mm stereo jack input XLR Mix out XLR Aux out RJ45 QuickSmart Link connector Bluetooth Stereo input with TWS ¼-inch footswitch control jack input

	EVOLVE 50M G2
Enclosure	Plywood with polyurea coating (subwoofer) Composite (column) Aluminum (pole)
Grille material	Steel with black or white powder coat
Color	Black or white
Dimensions (H x W x D) (in)	20.08 in x 13.54 in x 18.50 in (subwoofer) 32.48 in x 4.02 in x 6.43 in (column) 36.57 in x 1.91 in x 2.16 in (pole)
Dimensions (H x W x D) (mm)	510 mm x 344 mm x 470 mm (subwoofer) 825 mm x 102 mm x 163.26 mm (column) 929 mm x 48.49 mm x 54.82 mm (pole)
Assembled dimensions (H x W x D) (in)	82.40 in x 13.54 in x 18.50 in
Assembled dimensions (H x W x D) (mm)	2093 mm x 344 mm 470 mm
Shipping dimensions (H x W x D) (in)	24.29 in x 16.69 in x 21.69 in (subwoofer) 7.09 in x 11.81 x 38.82 in (column, pole, and carry bag)
Shipping dimensions (H x W x D) (mm)	617 mm x 424 mm x 551 mm (subwoofer) 180 mm x 300 mm x 986 mm (column, pole, and carry bag)
Weight (lb)	55.6 lb (assembled system) 42.66 lb (subwoofer) 10.47 lb (column) 2.4 lb (pole)
Weight (kg)	25.2 kg (assembled system) 19.35 kg (subwoofer) 4.75 kg (column) 1.1 kg (pole)
Shipping weight (lb)	50.7 lb (subwoofer) 18.7 lb (column, pole, and carrying bag)
Shipping weight (kg)	23 kg (subwoofer) 8.5 kg (column, pole, and carrying bag)

[1]Full-space measurement using **MUSIC** DSP preset.
[2]Maximum SPL is measured at 1 m using broadband pink noise at maximum output.
[3]Current rating is 1/8 power.

	EVOLVE 50 G2
Column	(8) 3.5-inch neodymium drivers
Subwoofer	(1) 12-inch woofer
Frequency response (-3 dB) (Hz)[1]	43 Hz – 20,000 Hz

	EVOLVE 50 G2
Frequency range (-10 dB) (Hz)[1]	37 Hz – 20,000 Hz
Maximum sound pressure level at a distance of 1 m (dB)[2]	129 dB
Coverage angle HxV (°)	120° x 40°
Amplifier rating (W)	1500 W
Power consumption (V, Hz, A)[3]	100 - 240 VAC, 50 - 60 Hz, 1.0 - 0.5 A
LF channel rating (W)	800 W
HF channel rating (W)	700 W
Crossover frequency (Hz)	200 Hz
Connector type	Dual XLR/TRS combo jack mic / line inputs with switchable 48V phantom power XLR/TRS combo stereo jack Stereo RCA line input 3.5 mm stereo jack input XLR Mix out RJ45 QuickSmart Link connector Bluetooth Stereo input with TWS
Enclosure	Plywood with polyurea coating (subwoofer) Composite (column) Aluminum (pole)
Grille material	Steel with black or white powder coat
Color	Black or white
Dimensions (H x W x D) (in)	20.08 in x 13.54 in x 18.50 in (subwoofer) 32.48 in x 4.02 in x 6.43 in (column) 36.57 in x 1.91 in x 2.16 in (pole)
Dimensions (H x W x D) (mm)	510 mm x 344 mm x 470 mm (subwoofer) 825 mm x 102.4 mm x 163.26 mm (column) 929 mm x 48.49 mm x 54.82 mm (pole)
Assembled dimensions (H x W x D) (in)	82.40 in x 13.54 in x 18.50 in
Assembled dimensions (H x W x D) (mm)	2093 mm x 344 mm x 470 mm
Shipping dimensions (H x W x D) (in)	24.29 in x 16.69 in x 21.69 in (subwoofer) 7.09 in x 11.81 x 38.82 in (column, pole, and carry bag)
Shipping dimensions (H x W x D) (mm)	617 mm x 424 mm x 551 mm (subwoofer) 180 mm x 300 mm x 986 mm (column, pole, and carry bag)
Weight (lb)	55.8 lb (assembled system) 43 lb (subwoofer) 10.6 lb (column) 2.4 lb (pole)

	EVOLVE 50 G2
Weight (kg)	25.3 kg (assembled system) 19.5 kg (subwoofer) 4.8 kg (column) 1.1 kg (pole)
Shipping weight (lb)	49.93 lb (subwoofer) 18.7 lb (column, pole, and carrying bag)
Shipping weight (kg)	22.65 kg (subwoofer) 8.5 kg (column, pole, and carrying bag)

[1]Full-space measurement using **MUSIC** DSP preset.
[2]Maximum SPL is measured at 1 m using broadband pink noise at maximum output.
[3]Current rating is 1/8 power.

12.1 Block diagram

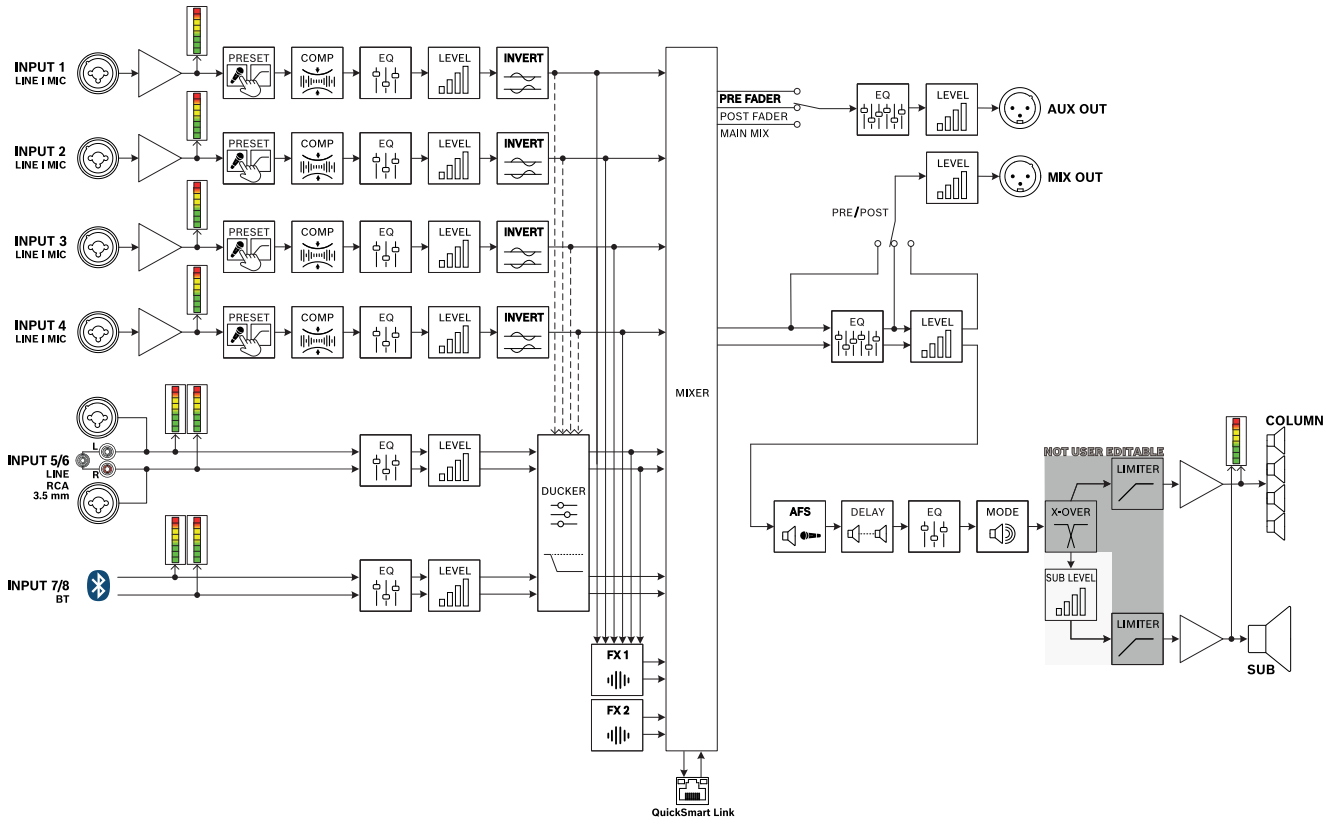

Figure 12.1: EVOLVE 30M G2 and EVOLVE 50M G2 in default mode

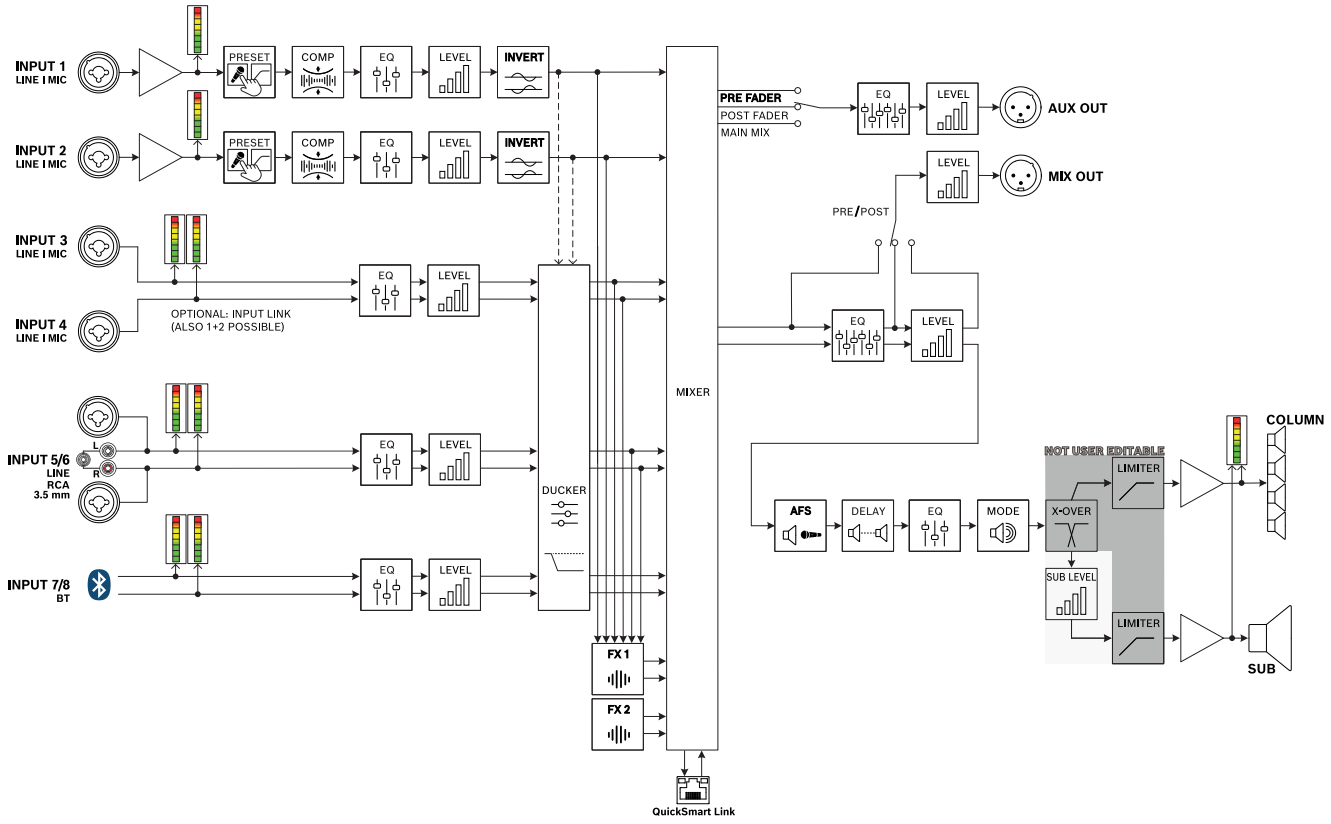

Figure 12.2: EVOLVE 30M G2 and EVOLVE 50M G2 with INPUT LINK enabled on INPUT 3/4

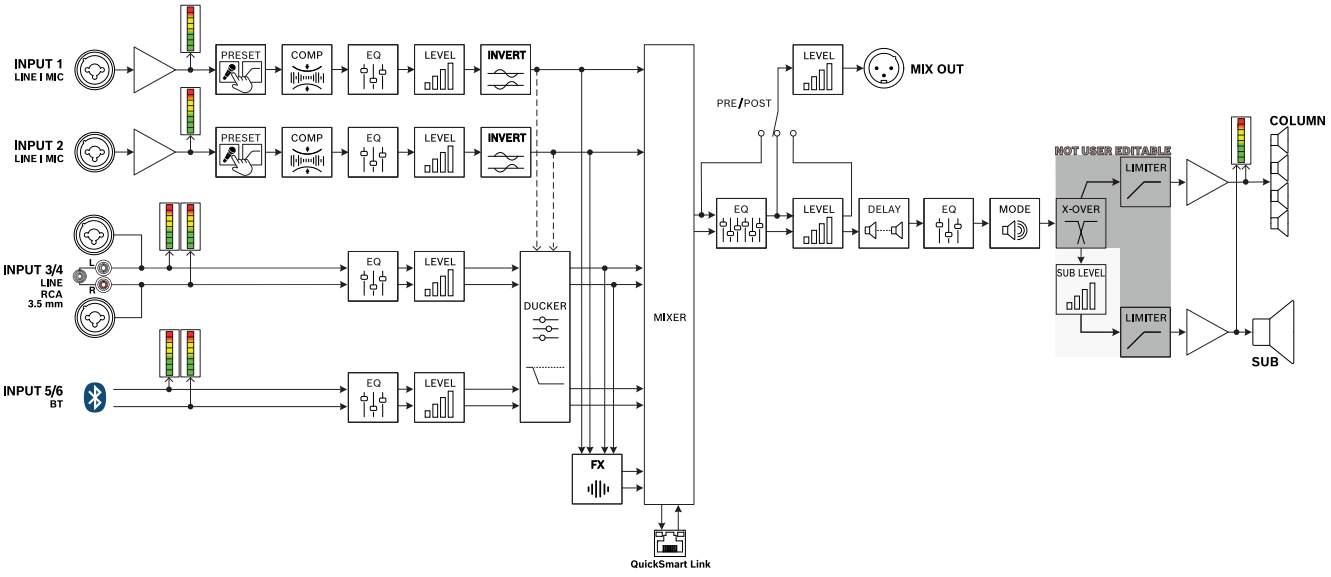

Figure 12.3: EVOLVE 50 G2

12.2 Dimensions

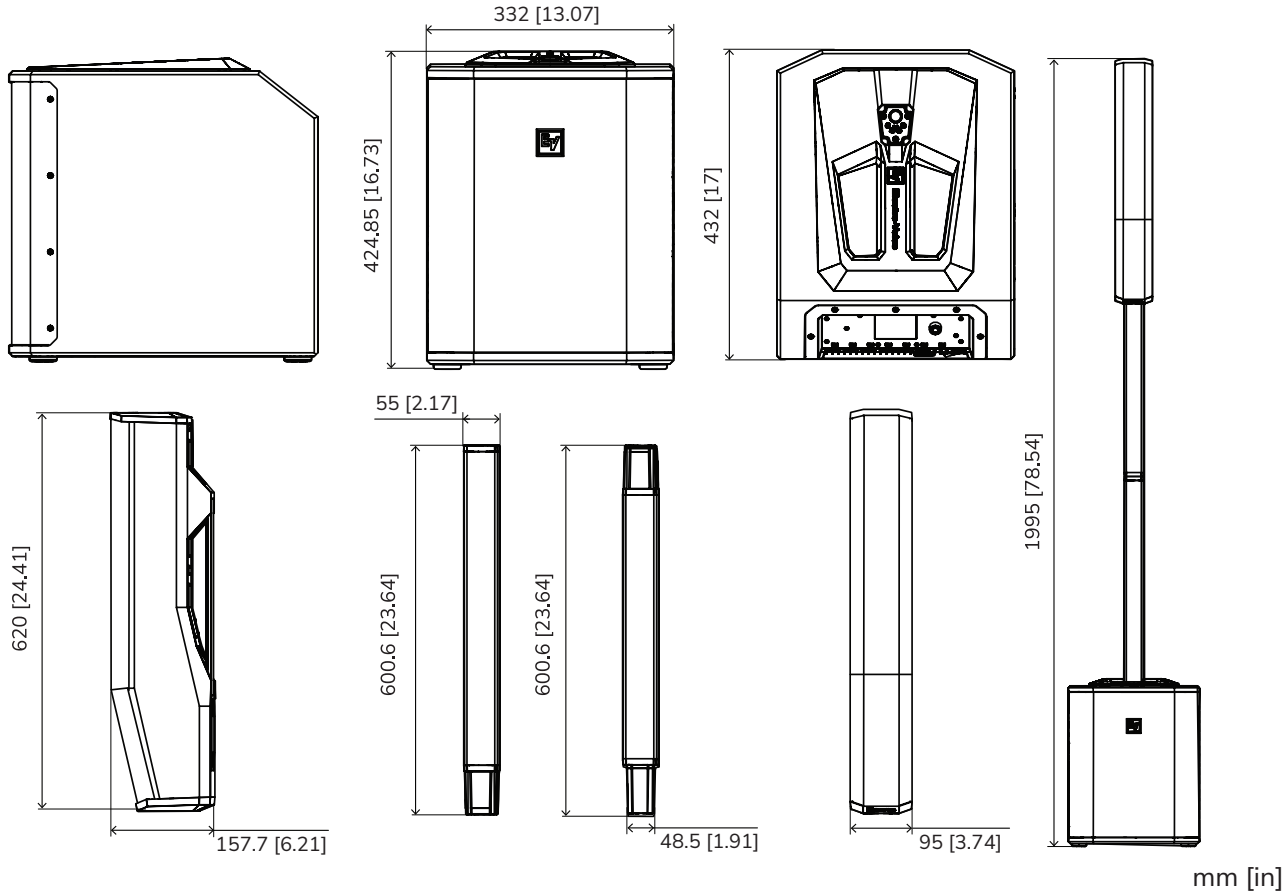

Figure 12.4: EVOLVE 30M G2

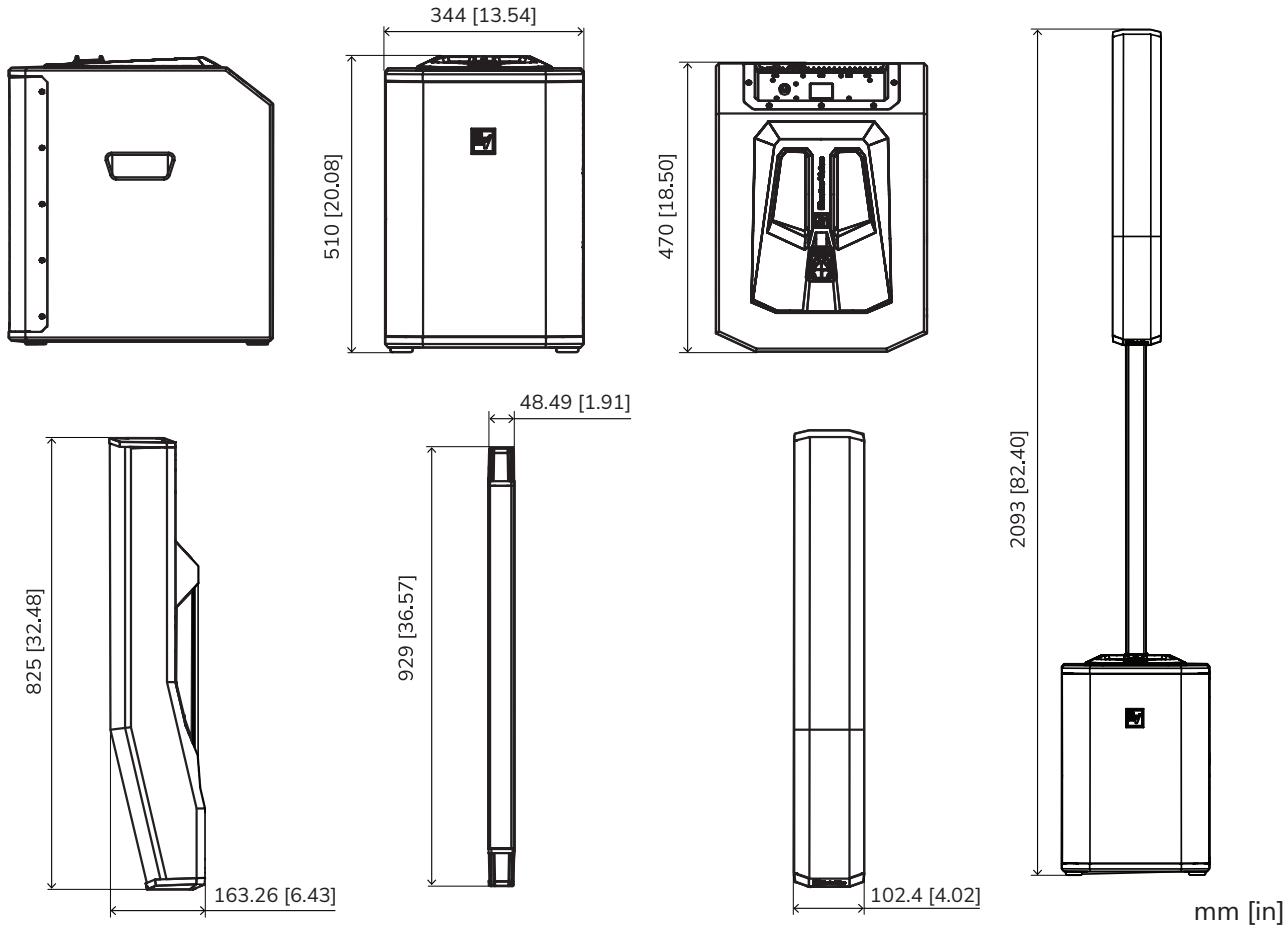

Figure 12.5: EVOLVE 50M G2 and EVOLVE 50 G2

13 Appendices

13.1 DSP control menu list

13.1.1 Main control menu list

Grey boxes are default values

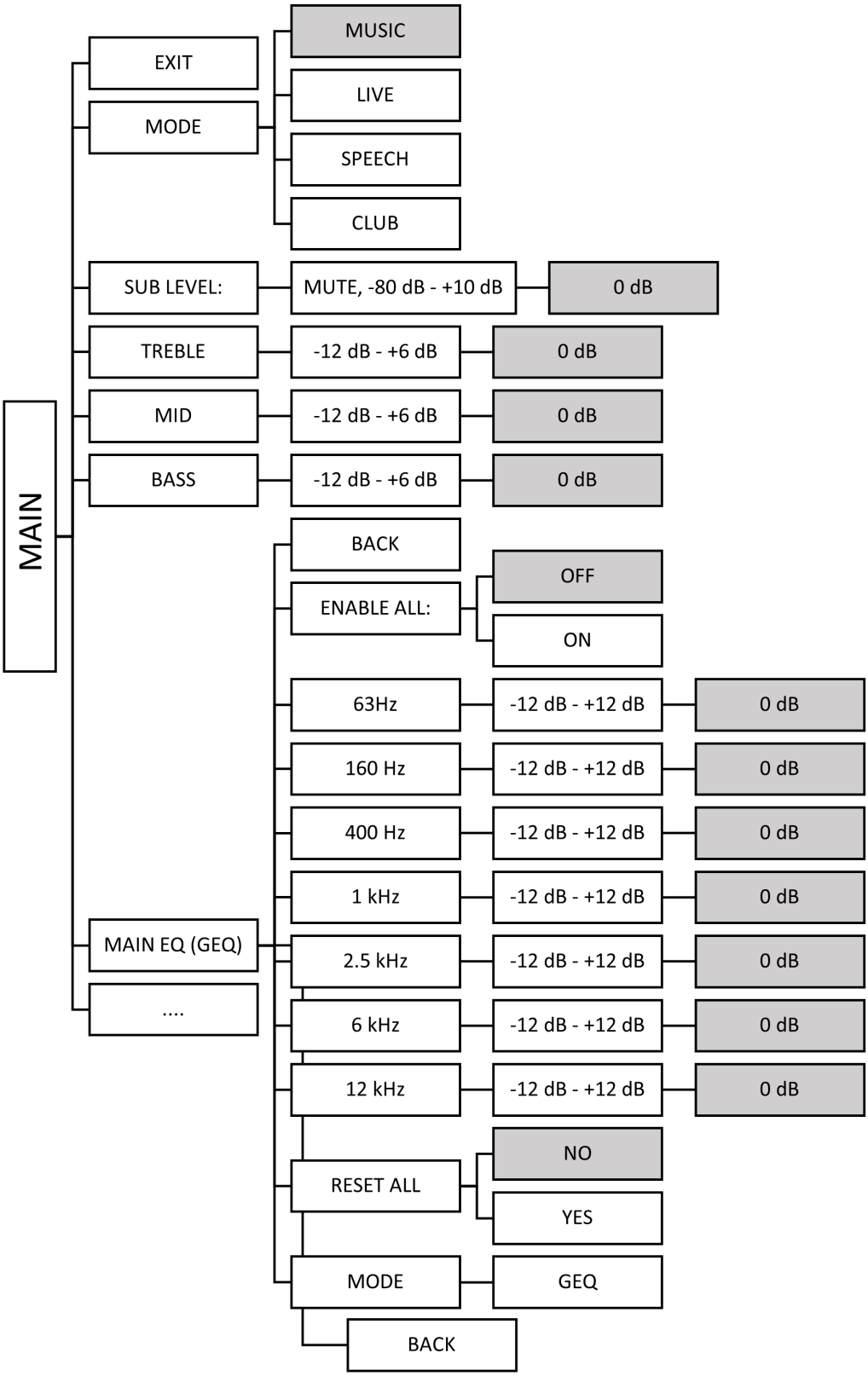

Grey boxes are default values

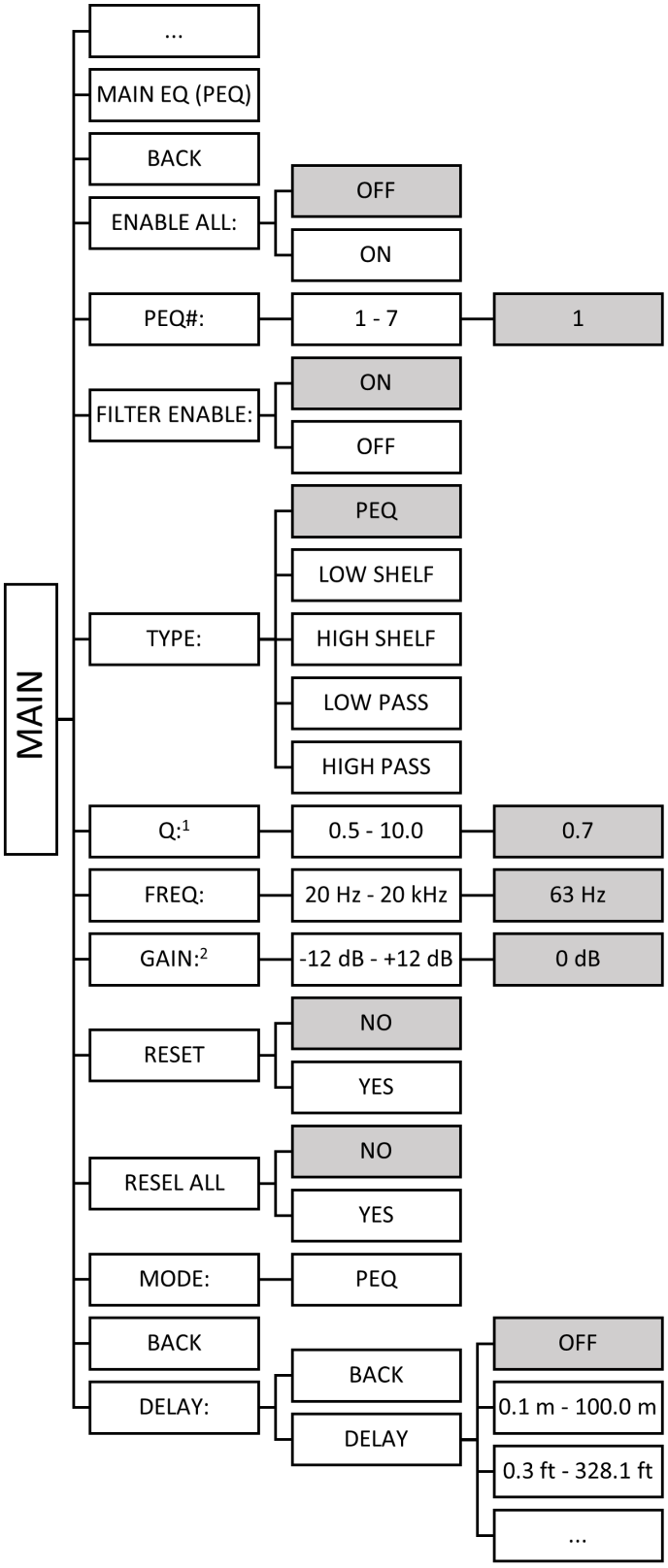

[1] Available when **TYPE:** is **PEQ**

[2] Available when **TYPE:** is **PEQ**, **LOW SHELF** and **HIGH SHELF**

Grey boxes are default values

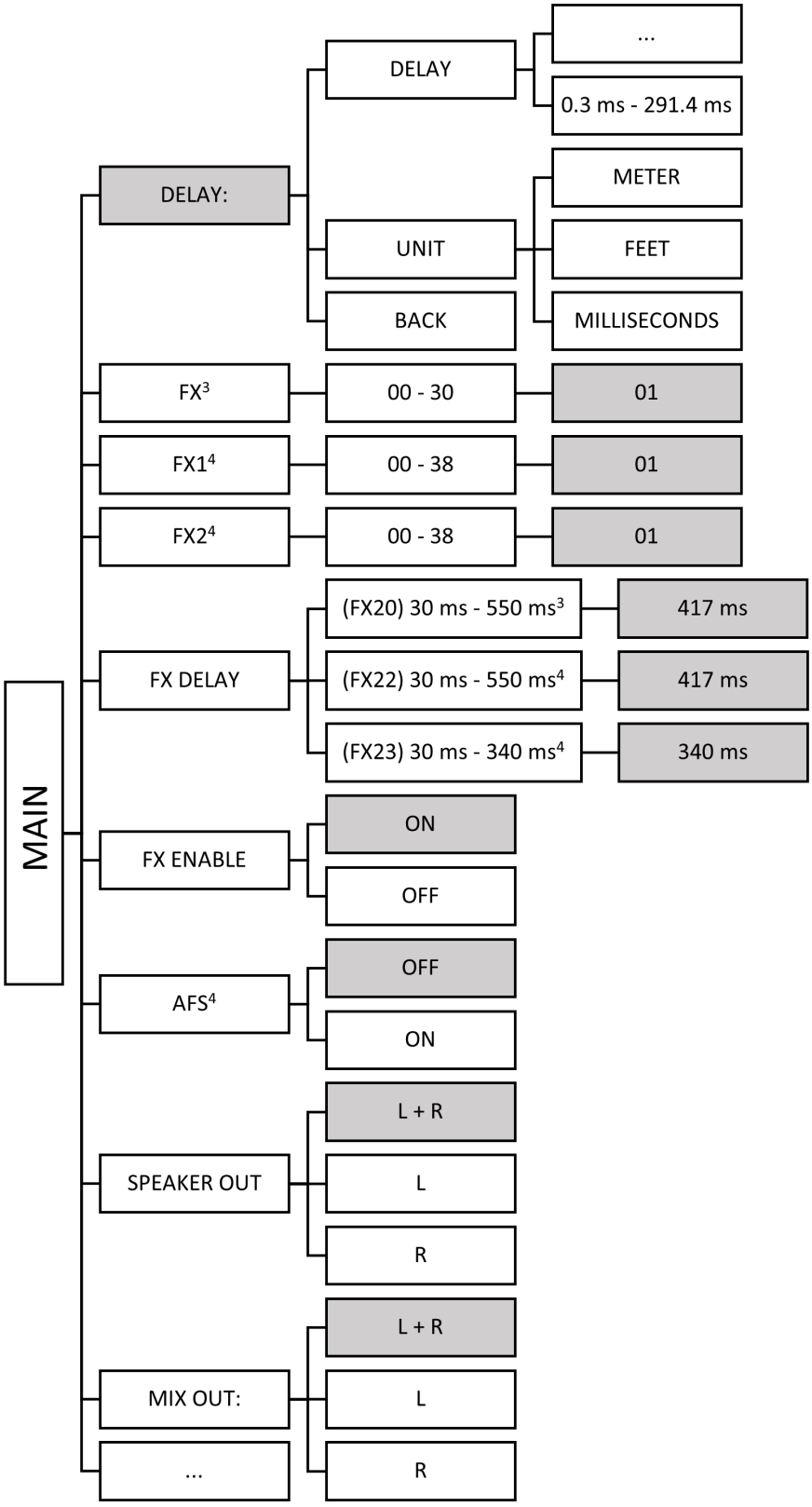

[3] Available on EVOLVE 50 G2 only

[4] Available on EVOLVE 30M G2 and EVOLVE 50M G2 only

Grey boxes are default values

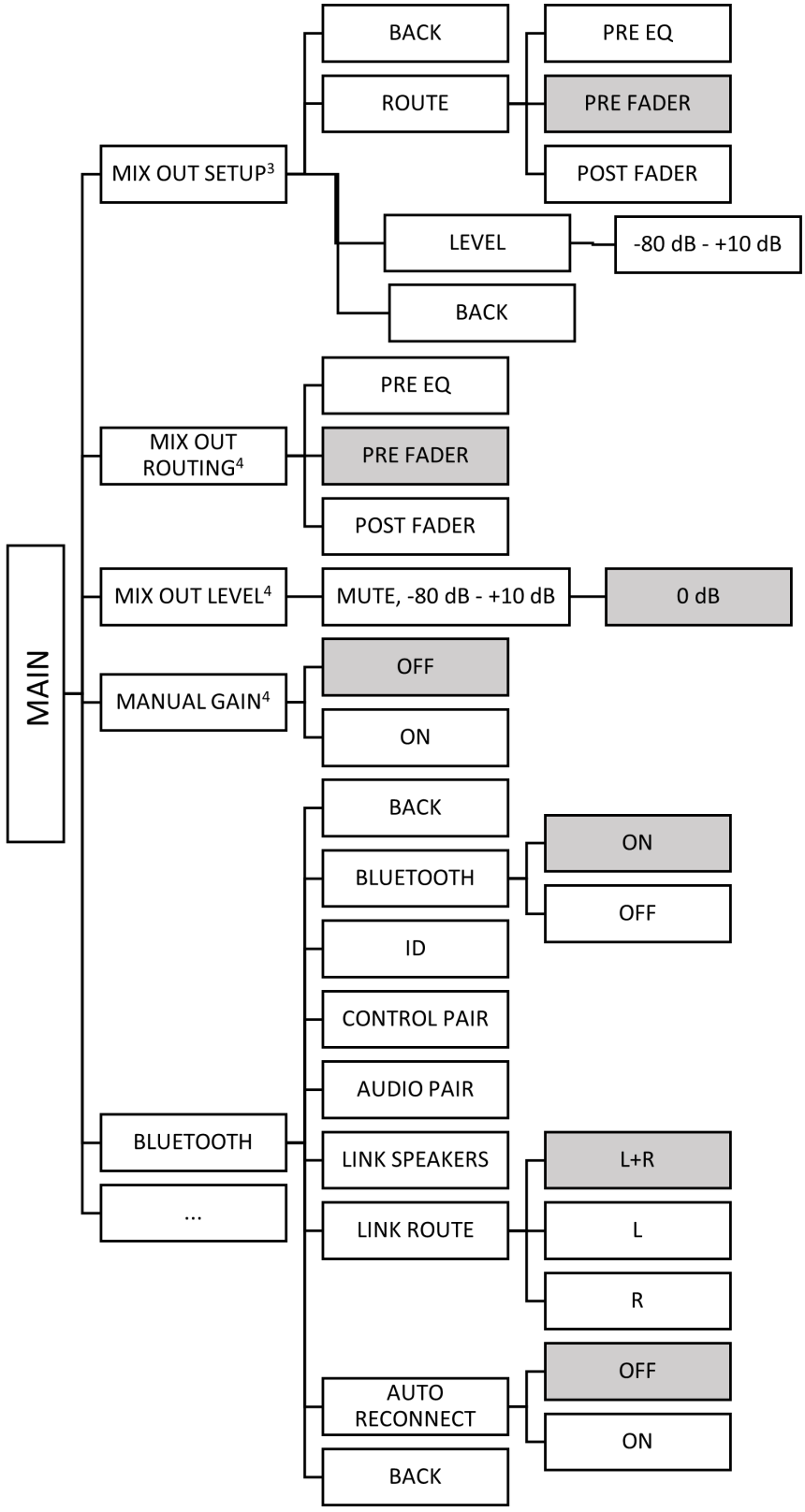

[4] Available on EVOLVE 30M G2 and EVOLVE 50M G2 only

Grey boxes are default values

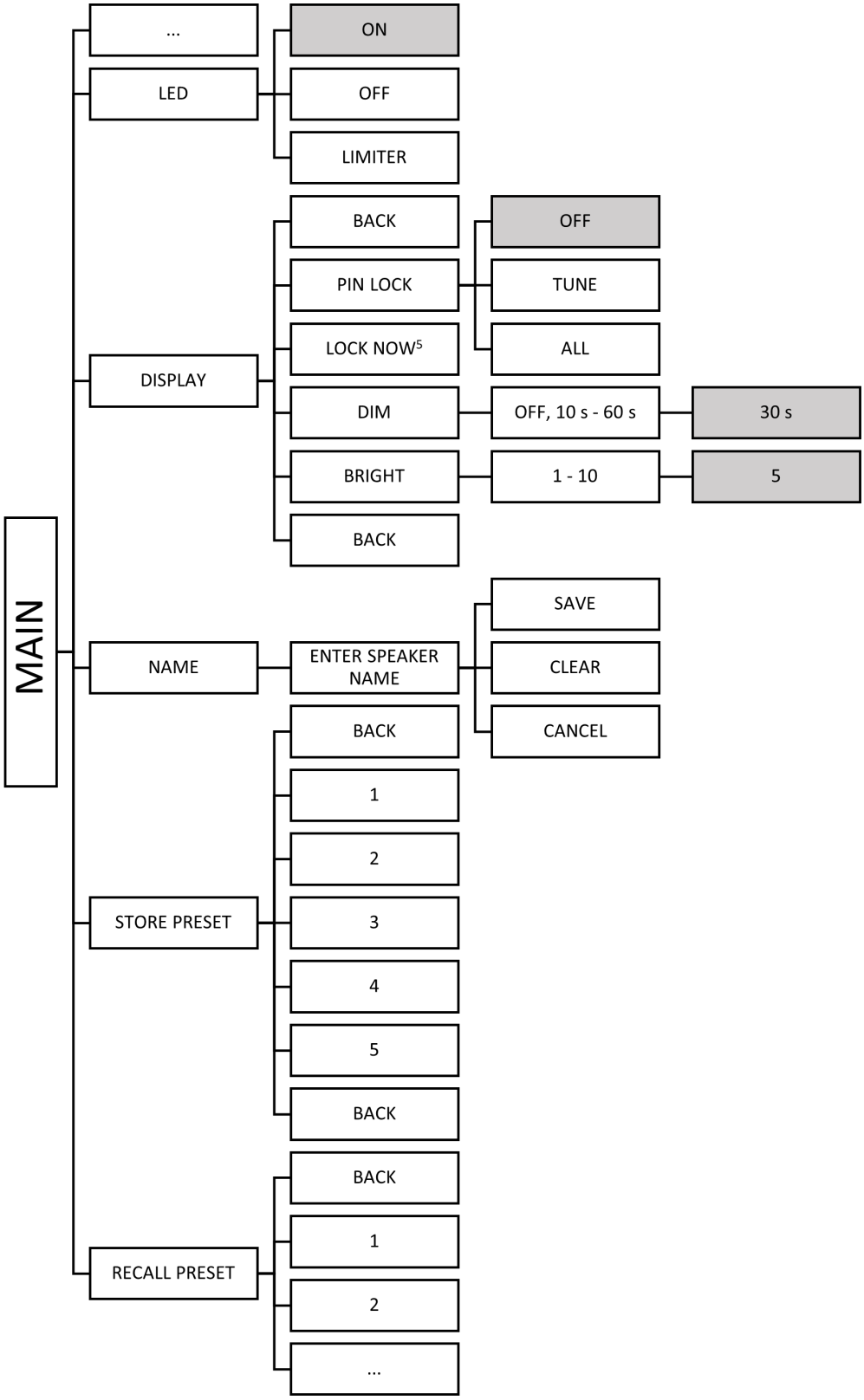

[5] Available only if PIN is set

Grey boxes are
default values

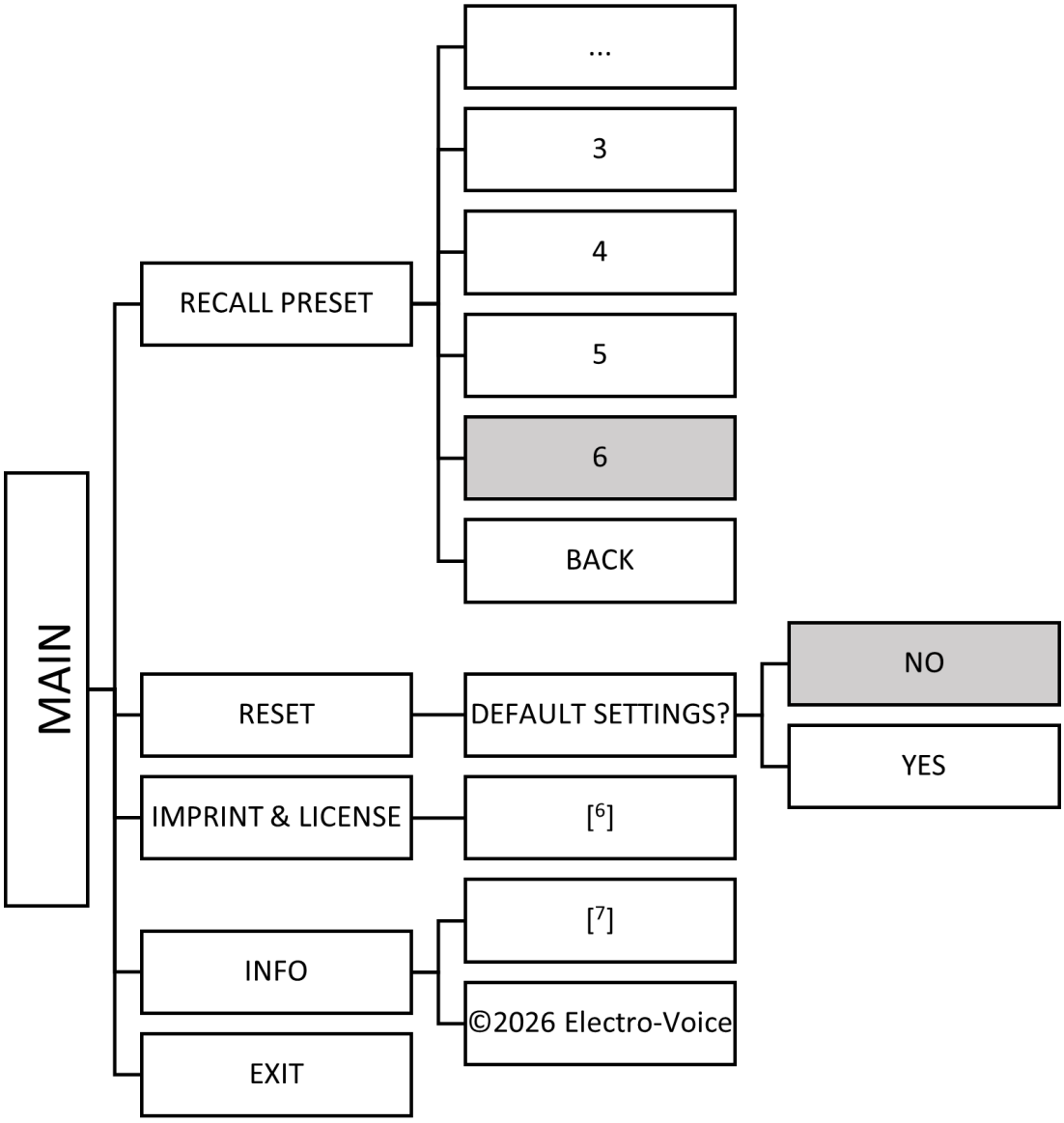

[6] OSS license text
[7] Model, firmware version, BT version, copyright

13.1.2 Input DSP control menu list

13.1.2.1 EVOLVE 30M G2 and EVOLVE 50M G2

13.1.2.1.1 INPUT 1-4

Grey boxes are default values

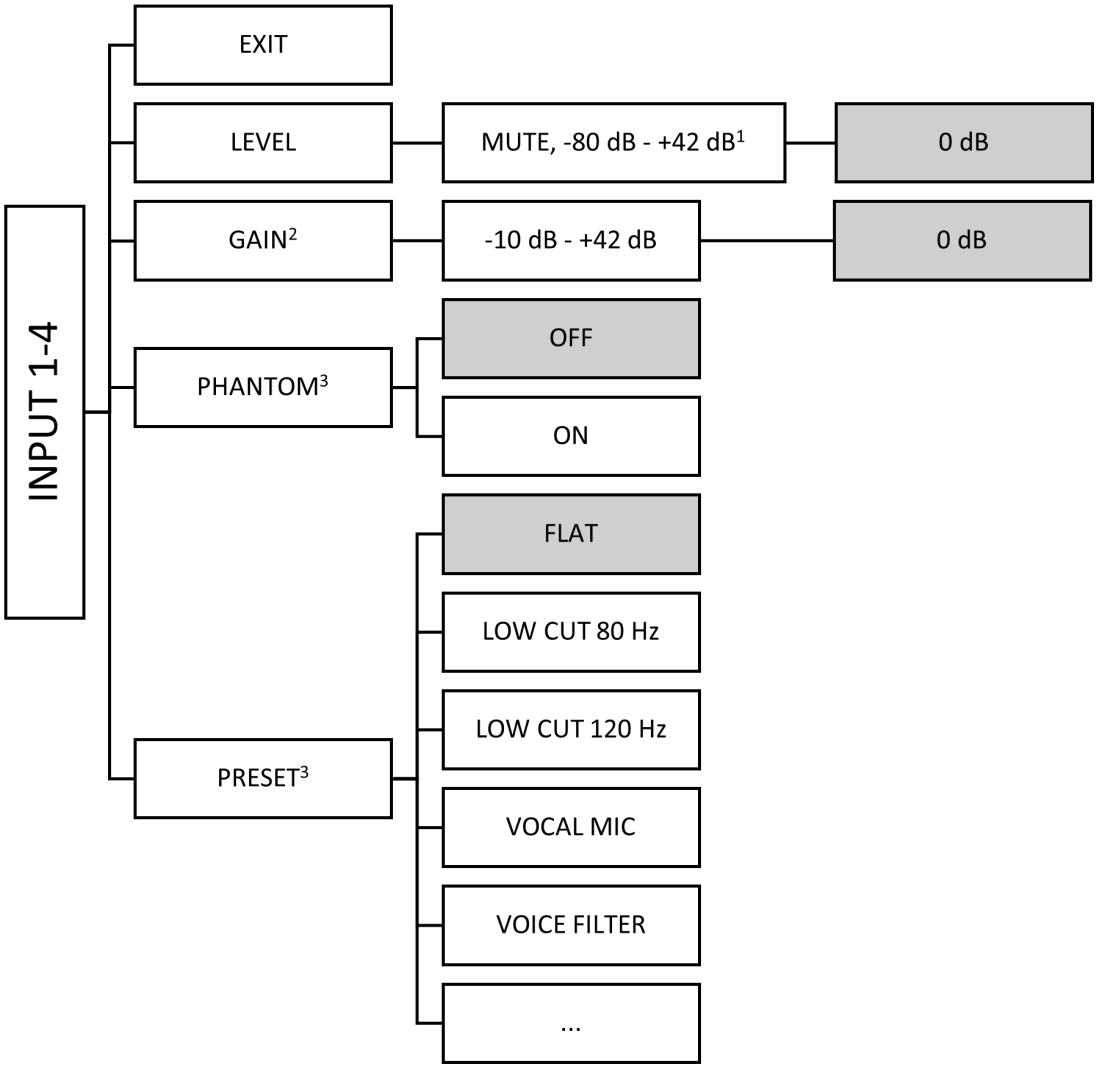

[1] -80 dB - +10 dB when **MANUAL GAIN:** is **ON**

[2] Available when **MANUAL GAIN:** is **ON** and **INPUT LINK:** is **OFF**

[3] Available when **INPUT LINK:** is **OFF**

Grey boxes are default values

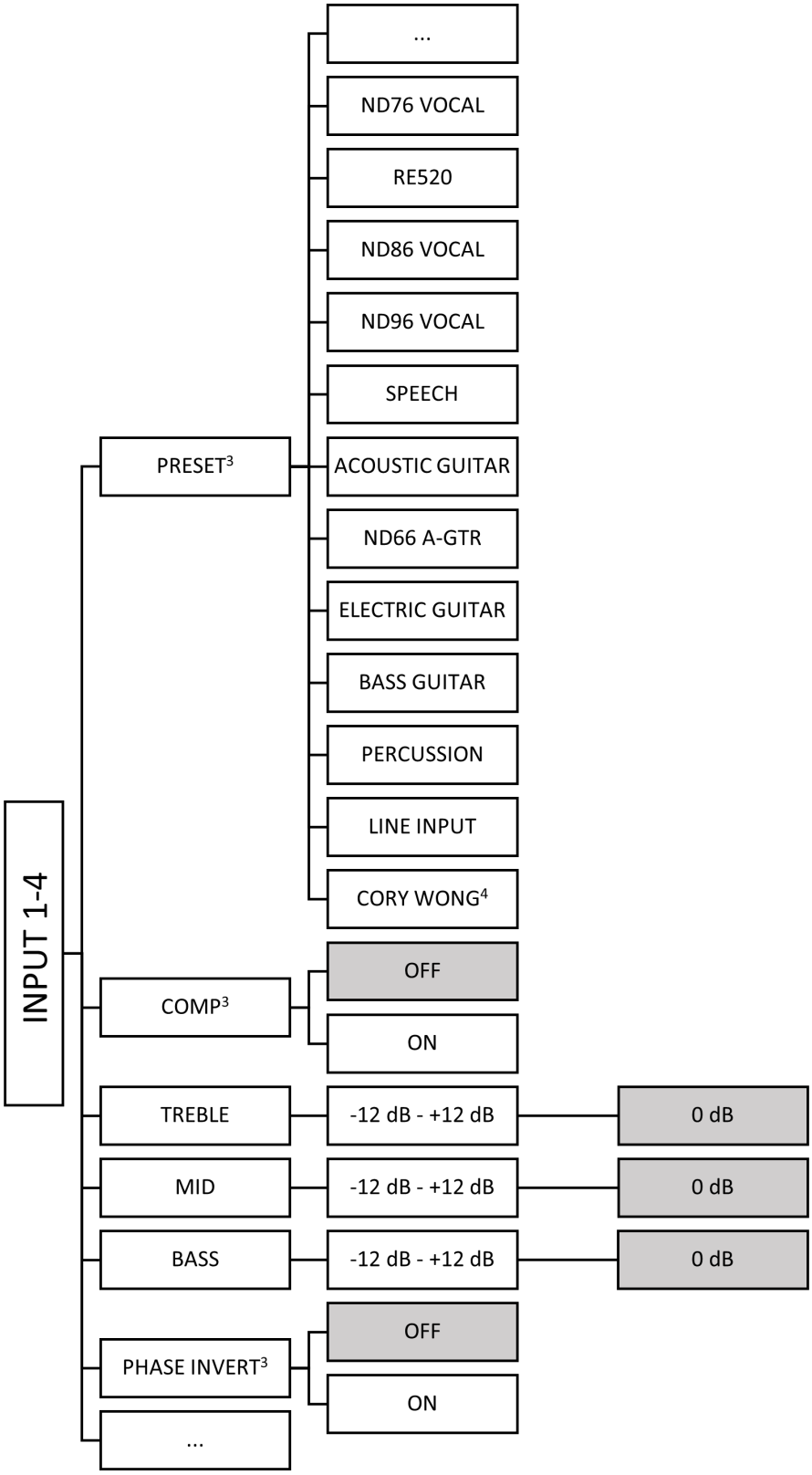

[3] Available when **INPUT LINK:** is **OFF**

[4] Available on EVOLVE 30M G2 only

Grey boxes are
default values

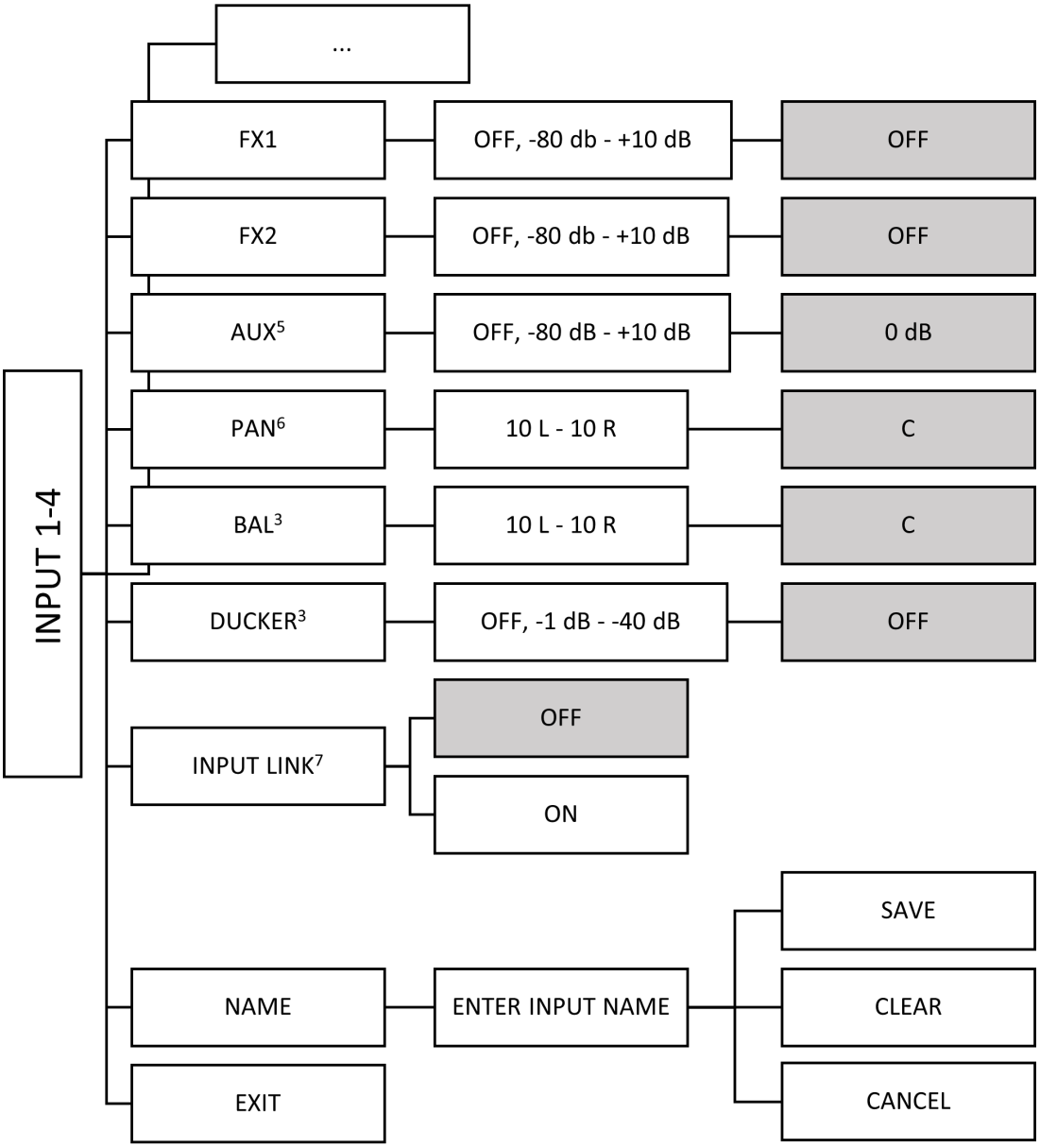

[3] Available when **INPUT LINK:** is **OFF**
[5] Available when **AUX OUT ROUTING**: is **AUX MIX**
[6] Available on stereo operation only
[7] Available on **INPUT 1** and **INPUT 3** only

13.1.2.1.2 INPUT 5/6

Grey boxes are default values

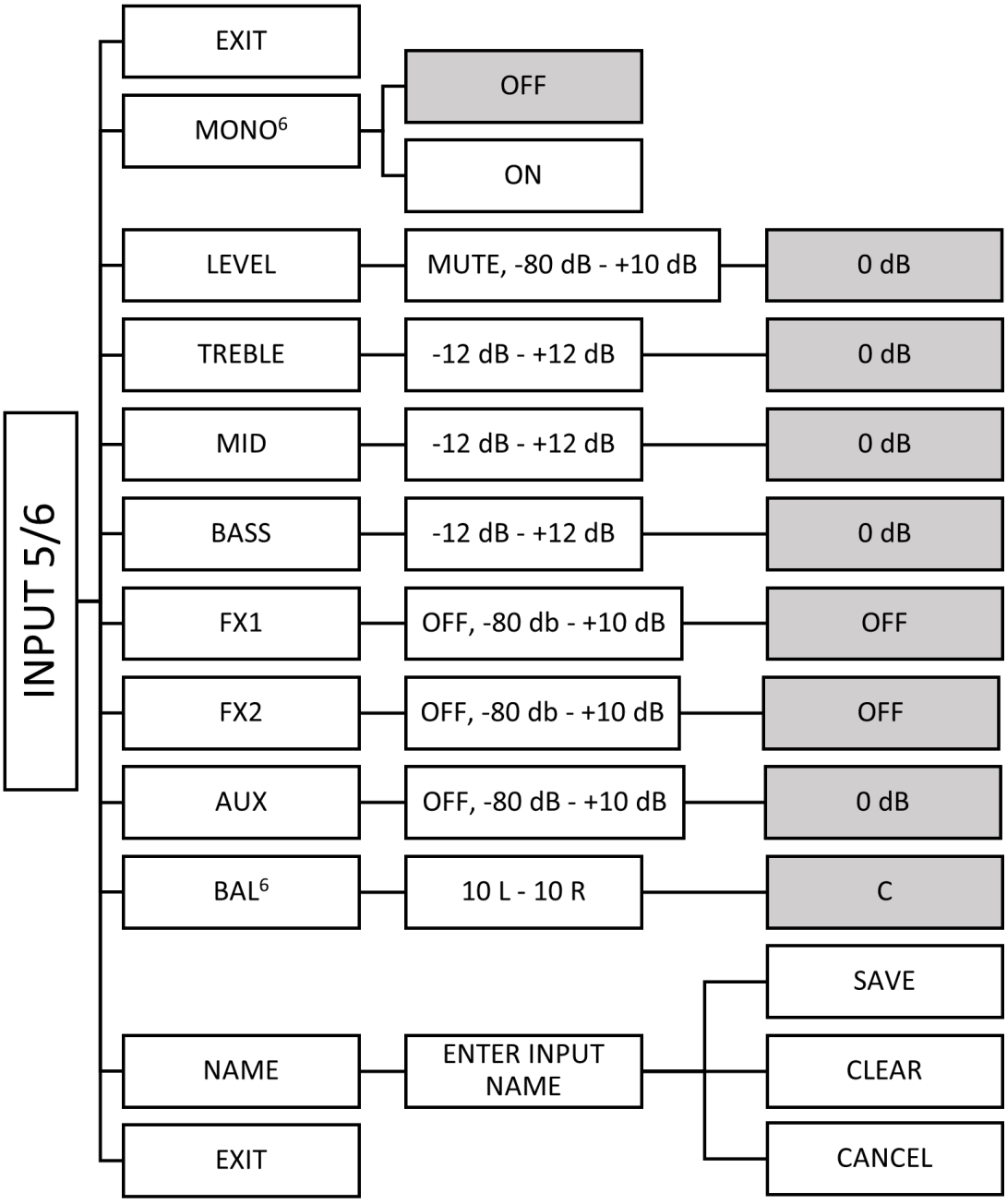

[6] Available on stereo operation only

13.1.2.1.3 INPUT 7/8

Grey boxes are default values

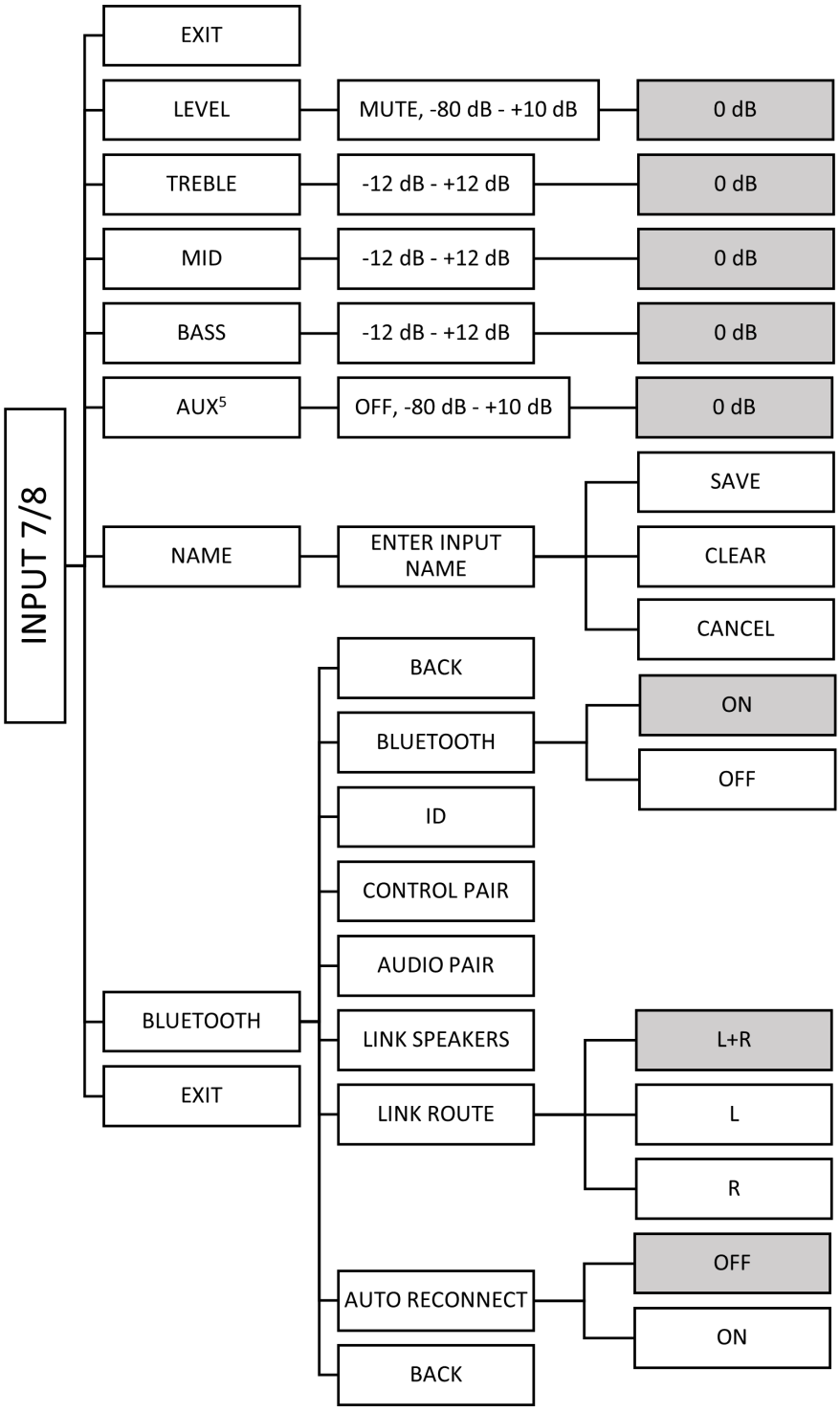

[5] Available when **AUX OUT ROUTING**: is **AUX MIX**

13.1.2.2 EVOLVE 50 G2

13.1.2.2.1 INPUT 1-2

Grey boxes are default values

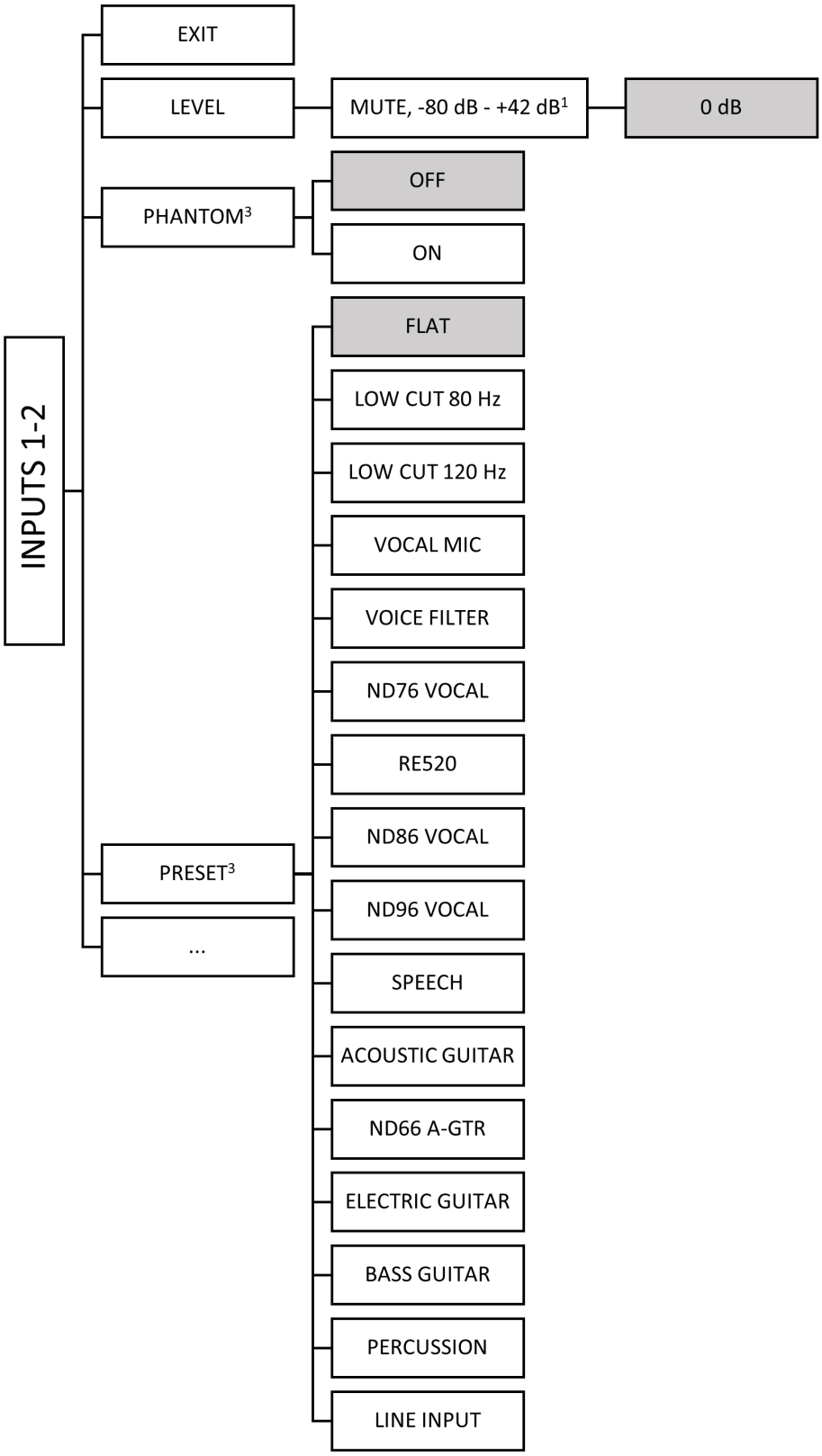

[1] -80 dB - +10 dB when **MANUAL GAIN:** is **ON**

[3] Available when **INPUT LINK:** is **OFF**

Grey boxes are
default values

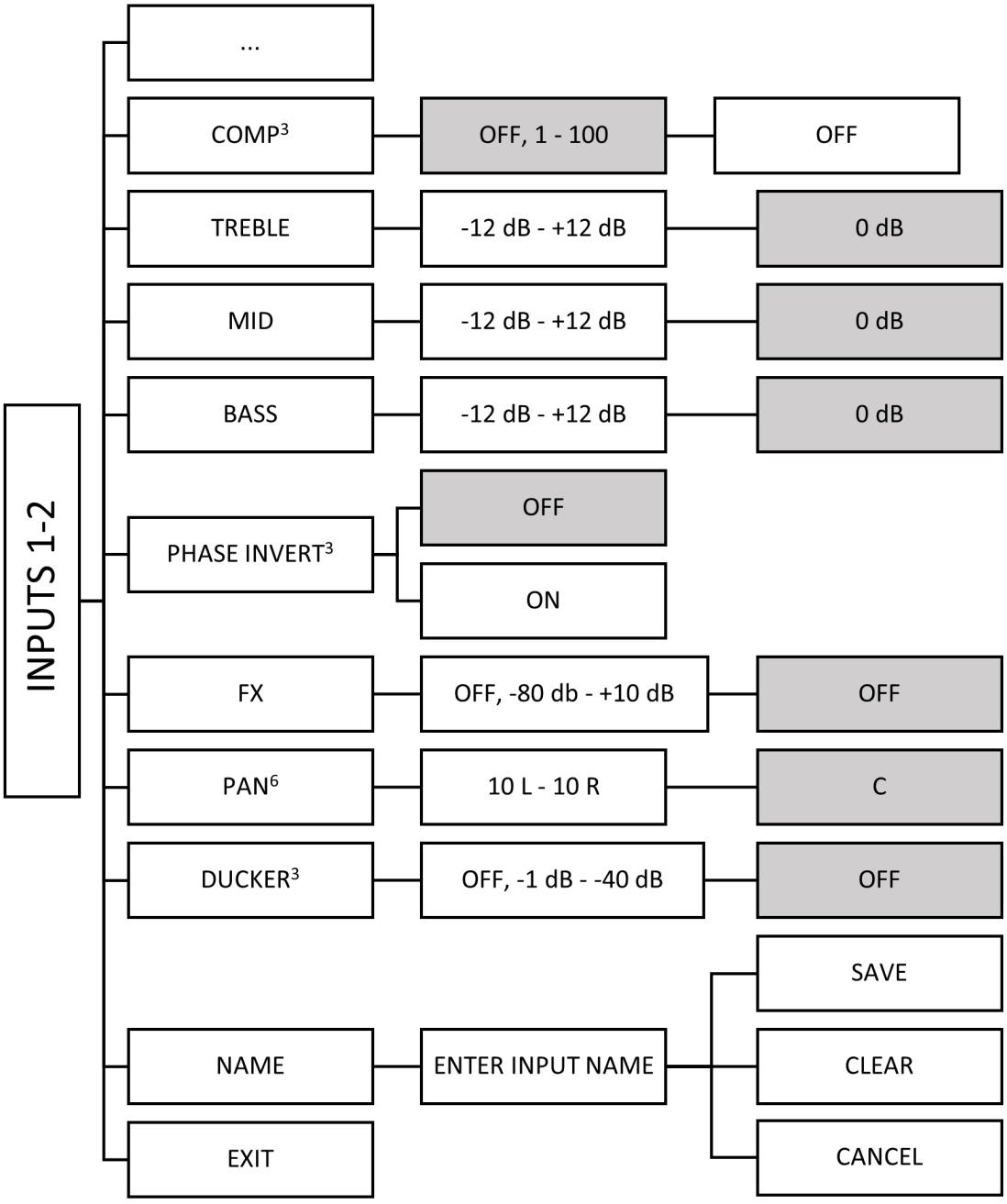

[3] Available when **INPUT LINK:** is **OFF**

[6] Available on stereo operation only

13.1.2.2.2 INPUT 3/4

Grey boxes are default values

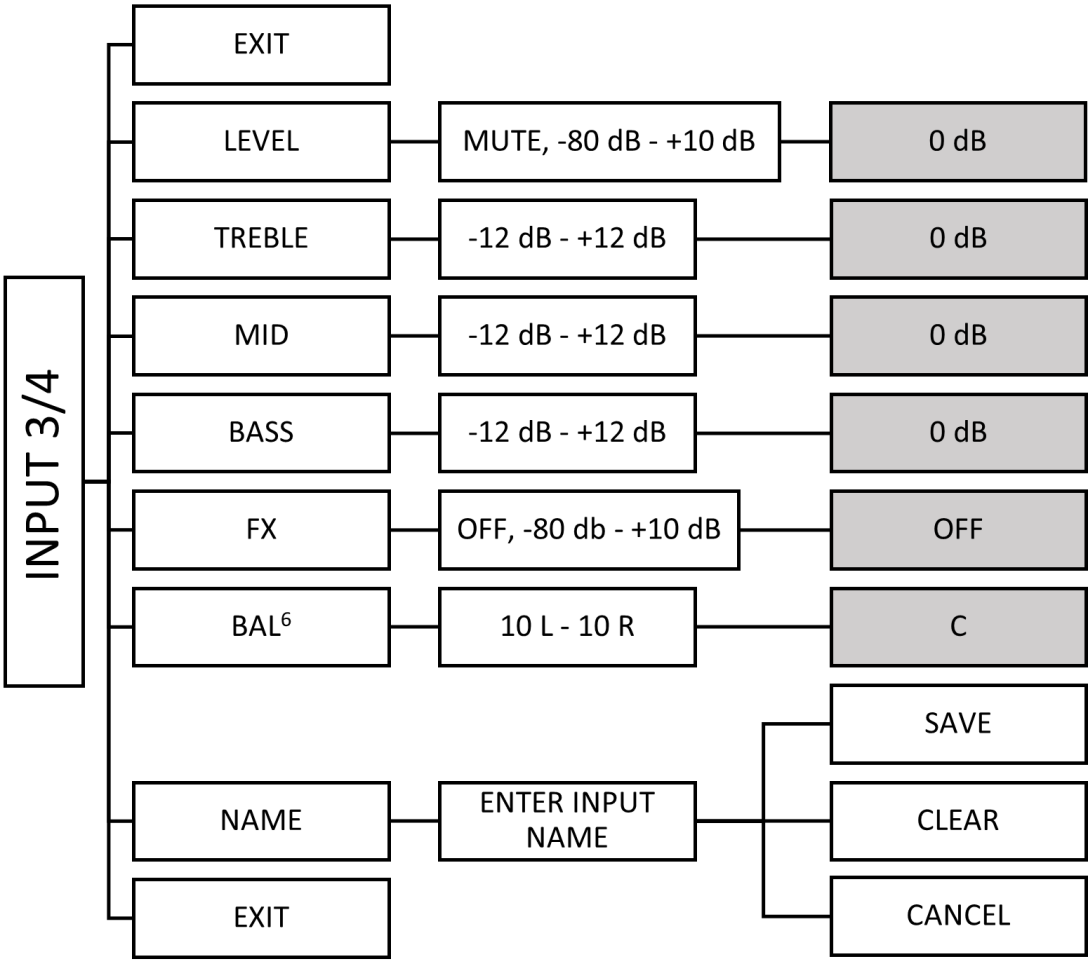

[6] Available on stereo operation only

13.1.2.2.3 INPUT 5/6

Grey boxes are default values

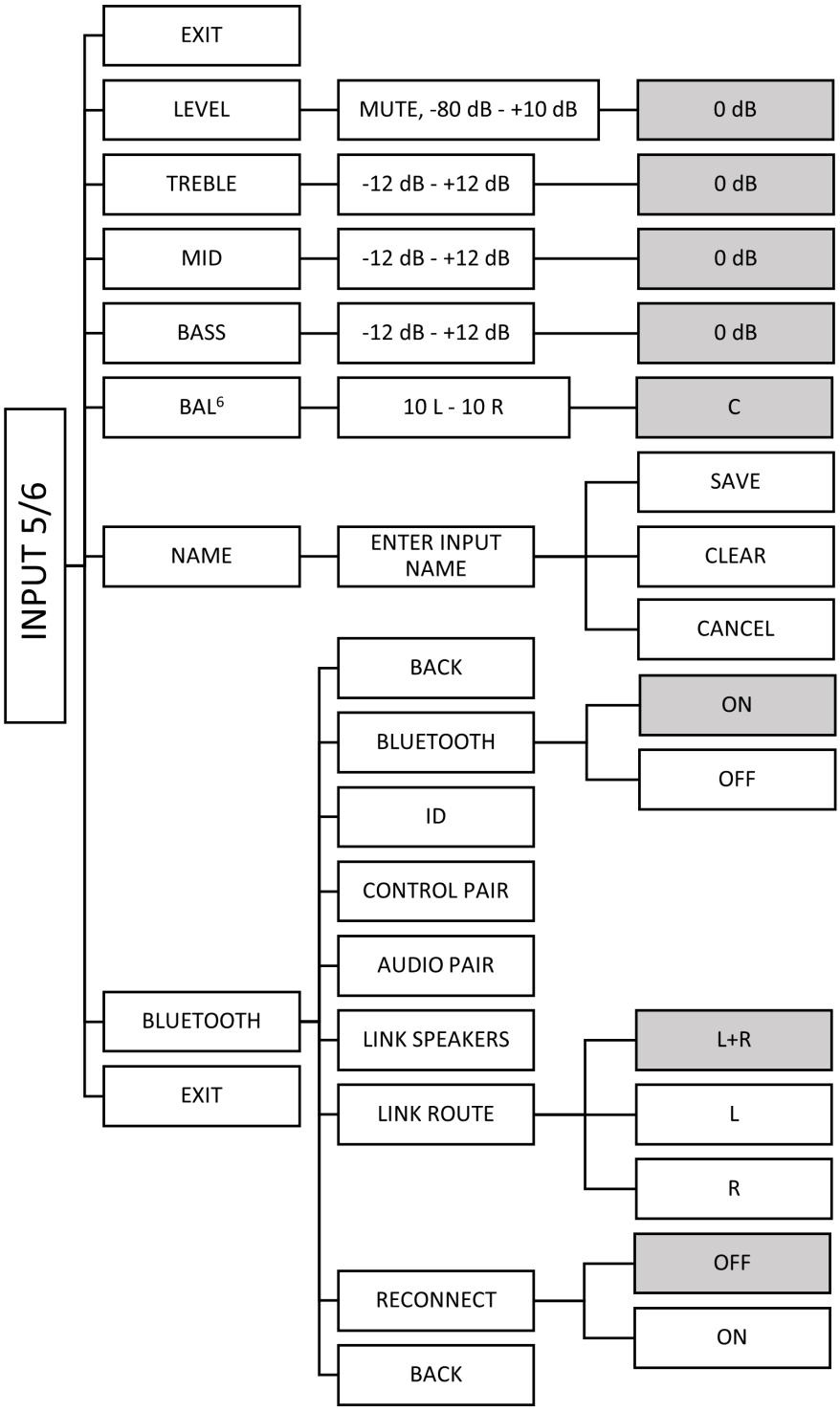

[6] Available on stereo operation only

13.1.3 AUX control menu list

Grey boxes are default values

The AUX control menu is available on EVOLVE 30M G2 and EVOLVE 50M G2 only.

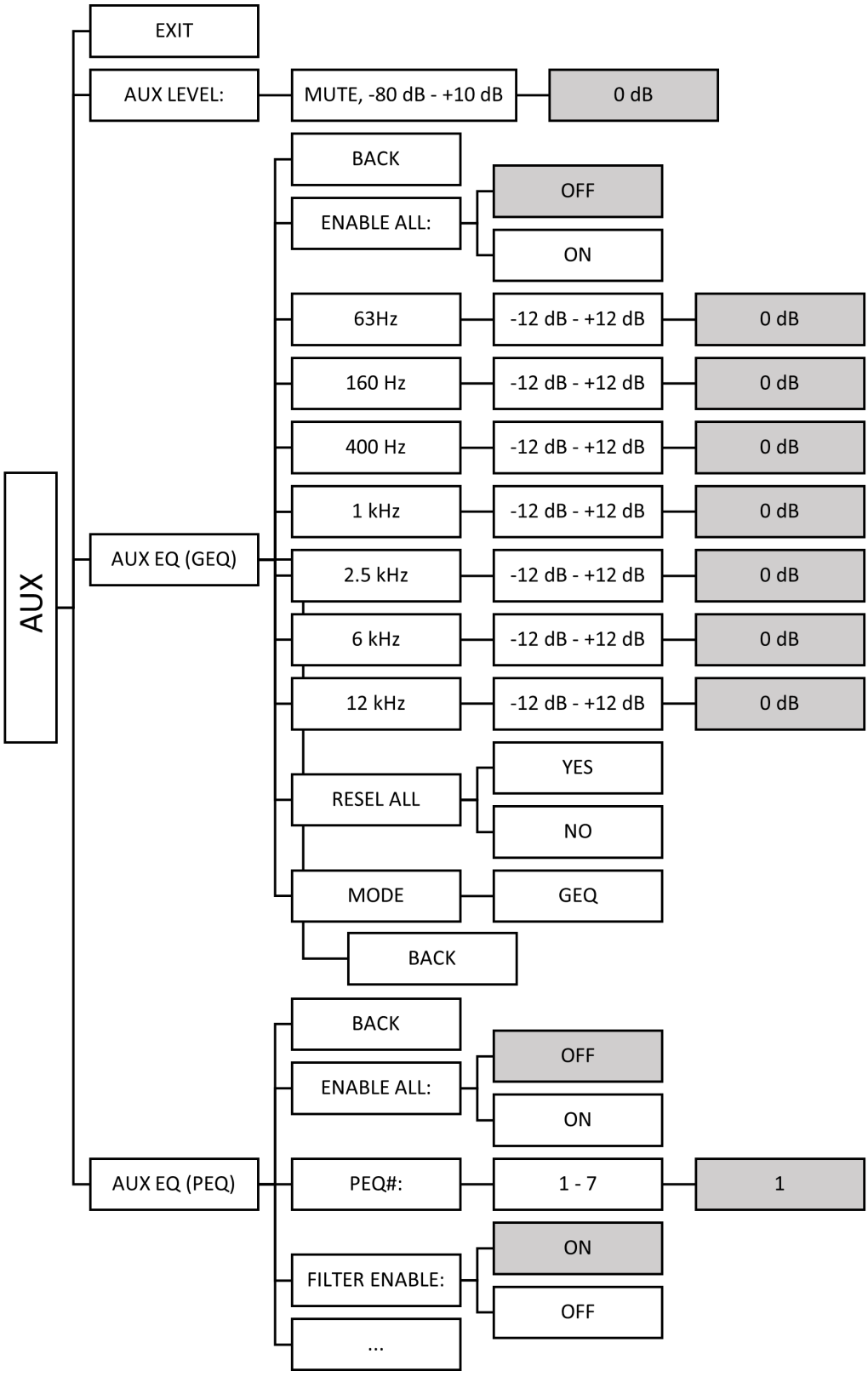

Grey boxes are default values

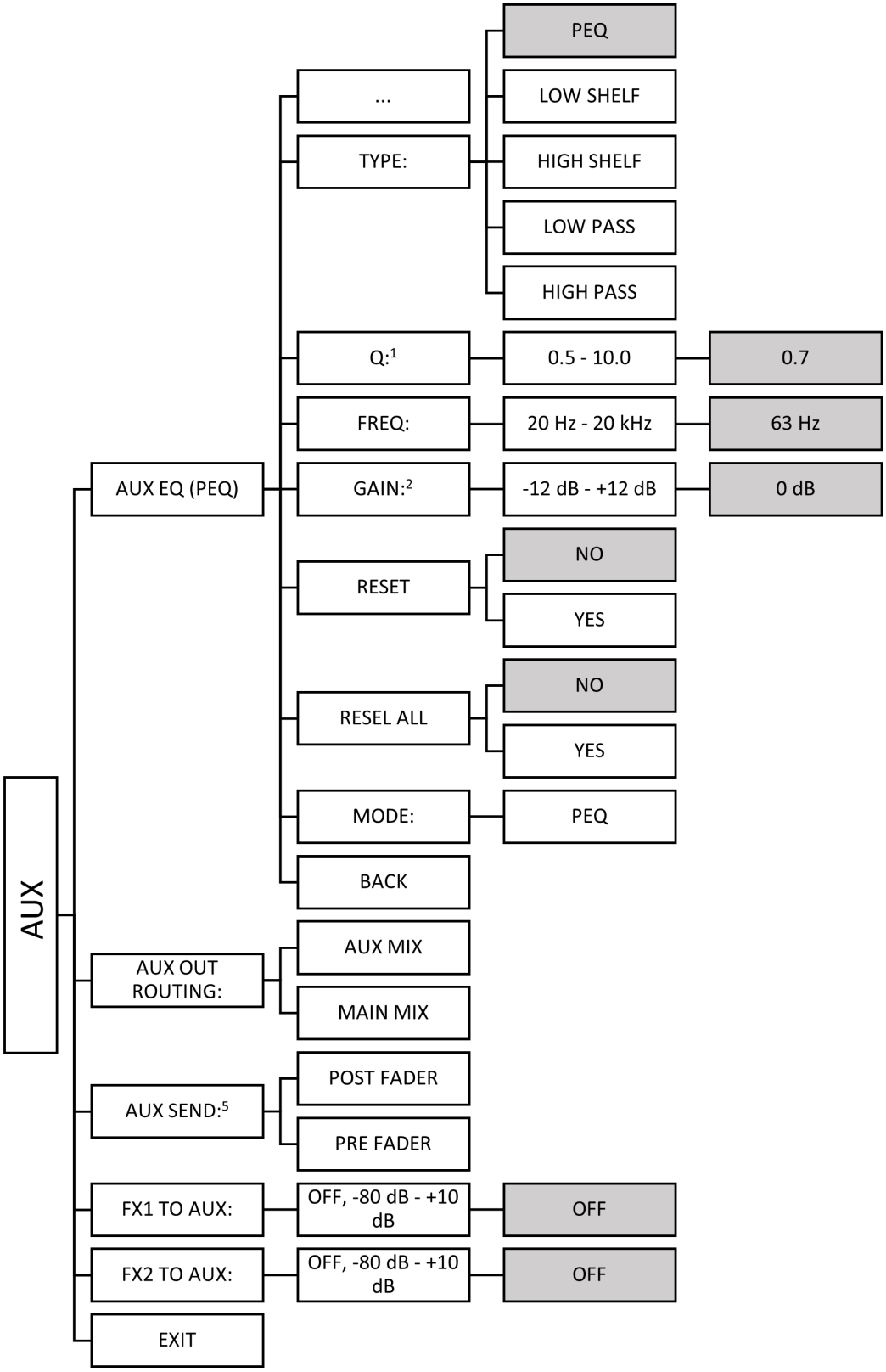

[1] Available when **TYPE:** is **PEQ**

[2] Available when **TYPE:** is **PEQ**, **LOW SHELF** and **HIGH SHELF**

[5] Available when **AUX OUT ROUTING**: is **AUX MIX**

13.2 Audio FX

Audio FX (effects) are processing techniques that alter the sound of an audio signal.
EVOLVE G2 audio FX are subject to change without notice.

13.2.1 FX1 and FX2 on EVOLVE 30M G2 and EVOLVE 50M G2

Number	Name
00	Off
01	Echo+Reverb Long
02	Echo+Reverb Short
03	Reverb Room
04	Reverb Concert Hall
05	Reverb Large Hall
06	Reverb Church
07	Reverb Cathedral
08	Reverb Room Soft
09	Reverb Concert Hall Soft
10	Reverb Large Hall Soft
11	Reverb Church Soft
12	Reverb Cathedral Soft
13	Reverb Plate Medium
14	Reverb Plate Long
15	Reverb Plate Medium Soft
16	Reverb Plate Long Soft
17	Reverb+Chorus Slow
18	Reverb+Chorus Medium
19	Reverb+Chorus Fast
20	Delay Short
21	Delay Long
22	Delay Tap
23	Delay Stereo Tap
24	Delay Short Soft
25	Delay Long Soft
26	Chorus Slow
27	Chorus Medium
28	Chorus Fast

Number	Name
29	Chorus+Echo Slow
30	Chorus+Echo Fast
31	Jet Flanger
32	Slapback+Echo Slow
33	Slapback+Echo Fast
34	Doubling Narrow
35	Doubling Medium
36	Doubling Wide
37	Reverse

13.2.2 FX on EVOLVE 50 G2 effects

Number	Name
0	Off
1	Echo+Reverb Short
2	Reverb Room
3	Reverb Concert Hall
4	Reverb Large Hall
5	Reverb Church
6	Reverb Room Soft
7	Reverb Concert Hall Soft
8	Reverb Large Hall Soft
9	Reverb Church Soft
10	Reverb Cathedral Soft
11	Reverb Plate Medium
12	Reverb Plate Long
13	Reverb Plate Medium Soft
14	Reverb Plate Long Soft
15	Reverb+ChorusSlow
16	Reverb+ChorusMedium
17	Reverb+ChorusFast
18	Delay Short

Number	Name
19	Delay Long
20	Delay Tap
21	Chorus Slow
22	Chorus Medium
23	Chorus Fast
24	Chorus+Echo Slow
25	Chorus+EchoMedium
26	Chorus+Echo Fast
27	Slap Back+EchoSlow
28	Slap Back+EchoFast
29	Doubling Narrow
30	Doubling Wide

13.3 QuickSmart Link compatibility

QSL Matrix	Evolve 50	Evolve 30M	Evolve 50M	Evolve 50 G2	Evolve 30M G2	Evolve 50M G2	Evolve 70	Evolve 90
Evolve 50	not possible	not possible	not possible	not possible	not possible	not possible	not possible	not possible
Evolve 30M	not possible	not possible	not possible	not possible	not possible	not possible	not possible	not possible
Evolve 50M	not possible	not possible	Audio/ CTRL	Audio only	Audio only	Audio only	Audio only	Audio only
Evolve 50 G2	not possible	not possible	Audio only	Audio/ CTRL	Audio only	Audio only	Audio only	Audio only
Evolve 30M G2	not possible	not possible	Audio only	Audio only	Audio/ CTRL	Audio/ CTRL	Audio only	Audio only
Evolve 50M G2	not possible	not possible	Audio only	Audio only	Audio/ CTRL	Audio/ CTRL	Audio only	Audio only
Evolve 70	not possible	not possible	Audio only	Audio only	Audio only	Audio only	Audio/ CTRL	Audio/ CTRL
Evolve 90	not possible	not possible	Audio only	Audio only	Audio only	Audio only	Audio/ CTRL	Audio/ CTRL

Figure 13.1: QuickSmart Link compatibility for EVOLVE G1 and EVOLVE G2 models

13.4 Parameters synced over QuickSmart Link

This section lists the loudspeaker parameters that synchronize over QuickSmart Link for the EVOLVE and EVOLVE G2 family.

Exception: The footswitch press that mutes the **FX ENABLE** is not considered for parameter synchronization. It will be detected and synchronized during use.

	EVOLVE 70 EVOLVE 90	EVOLVE 50 G2	EVOLVE 30M G2 EVOLVE 50M G2
MASTER LEVEL	Yes	Yes	Yes
MAIN LEVEL	n/a	n/a	n/a
TREBLE	Yes	Yes	Yes

	EVOLVE 70 EVOLVE 90	EVOLVE 50 G2	EVOLVE 30M G2 EVOLVE 50M G2
MID	Yes	Yes	Yes
BASS	Yes	Yes	Yes
MODE	Yes	Yes	Yes
MIX OUT	Yes	Yes	Yes
SUB LEVEL	Yes	Yes	Yes
DELAY	Yes	Yes	Yes
AUX OUT	n/a	n/a	Yes
SUB OUT ROUTING	Yes	n/a	n/a
SUB DELAY	Yes	n/a	n/a
FX ENABLE	Yes[1]	Yes	Yes
MIX OUT ROUTING	n/a	Yes	Yes
MAIN EQ	Yes	Yes	Yes
INPUT AUX SEND	n/a	n/a	Yes
INPUT MANUAL GAIN	n/a	n/a	Yes
FUNCTION	n/a	n/a	n/a

Table 13.1: Loudspeaker parameters synced over QuickSmart Link

[1] Since v1.1.0

13.5 Warranty information

For information on warranty periods and after sales service, visit:
www.electrovoice.com/support/warranty/

13.6 Regulatory information

13.6.1 FCC information

IMPORTANT: Do not modify this unit! Changes or modifications not expressly approved by the manufacturer could void the user's authority, granted by the FCC, to operate the equipment.

Notice!
This equipment has been tested and found to comply with the limits for a Class B digital device, pursuant to Part 15 of the FCC Rules. These limits are designed to provide reasonable protection against harmful interference in a residential installation. This equipment generates, uses and can radiate radio frequency energy and, if not installed and used in accordance with the instructions, may cause harmful interference to radio communications. However, there is no guarantee interference will not occur in a particular installation.

If this equipment does cause harmful interference to radio or television reception or receive audible interference from radio, television or communications equipment, which can be determined by turning the equipment off and on. The user is encouraged to try to correct the interference by one or more of the following measures:

- Reorient or relocate the receiving antenna.
- Increase the separation between the equipment and receiver.
- Connect the equipment into an outlet on a circuit different from that to which the receiver is connected.
- Consult the dealer or an experienced radio/TV/communications equipment technician.

The device has been granted by FCC the FCC ID 2BUWWEVOLVE.
Please take attention that changes or modification not expressly approved by the party responsible for compliance could void the user's authority to operate the equipment.
This equipment should be installed and operated with a minimum distance of 20 cm between the radiator and your body.
This equipment complies with FCC/IC RSS-102 radiation exposure limits set forth for an uncontrolled environment.
This device complies with Part 15 of the FCC Rules and Industry Canada license-exempt RSS standard(s). Operation is subject to the following two conditions:
(1) this device may not cause interference, and
(2) this device must accept any interference, including interference that may cause undesired operation of the device.
Le présent appareil est conforme aux CNR d'Industrie Canada applicables aux appareils radioexempts de licence. L'exploitation est autorisée aux deux conditions suivantes :
(1) l'appareil ne doit pas produire de brouillage, et
(2) l'utilisateur de l'appareil doit accepter tout brouillage radioélectrique subi, même si le brouillage est susceptible d'en compromettre le fonctionnement.

13.6.2 Simplified Declaration of Conformity (sDoC) for Europe (CE)

BG	С настоящото Electro-Voice Dynacord LLC декларира, че този тип радиосъоръжение EVOLVE30M-G2-EU, EVOLVE30M-G2-W, EVOLVE50-SB-G2-EU, EVOLVE50-SW-G2, EVOLVE50M-SB-G2-EU, EVOLVE50M-SW-G2, EVOLVE50M-CW-G2-EU, EVOLVE50M-CB-G2-EU, EVOLVE50-CW-G2-EU, EVOLVE50-CB-G2-EU е в съответствие с Директива 2014/53/ЕС. Цялостният текст на ЕС декларацията за съответствие може да се намери на следния интернет адрес: www.electrovoice.com
CS	Tímto Electro-Voice Dynacord LLC prohlašuje, že typ rádiového zařízení EVOLVE30M-G2-EU, EVOLVE30M-G2-W, EVOLVE50-SB-G2-EU, EVOLVE50-SW-G2, EVOLVE50M-SB-G2-EU, EVOLVE50M-SW-G2, EVOLVE50M-CW-G2-EU, EVOLVE50M-CB-G2-EU, EVOLVE50-CW-G2-EU, EVOLVE50-CB-G2-EU je v souladu se směrnicí 2014/53/EU. Úplné znění EU prohlášení o shodě je k dispozici na této internetové adrese: www.electrovoice.com
DA	Hermed erklærer Electro-Voice Dynacord LLC , at radioudstyrstypen EVOLVE30M-G2-EU, EVOLVE30M-G2-W, EVOLVE50-SB-G2-EU, EVOLVE50-SW-G2, EVOLVE50M-SB-G2-EU, EVOLVE50M-SW-G2, EVOLVE50M-CW-G2-EU, EVOLVE50M-CB-G2-EU, EVOLVE50-CW-G2-EU, EVOLVE50-CB-G2-EU er i overensstemmelse med direktiv 2014/53/EU. EU-overensstemmelseserklæringens fulde tekst kan findes på følgende internetadresse: www.electrovoice.com

DE	Hiermit erklärt Electro-Voice Dynacord LLC , dass der Funkanlagentyp EVOLVE30M-G2-EU, EVOLVE30M-G2-W, EVOLVE50-SB-G2-EU, EVOLVE50-SW-G2, EVOLVE50M-SB-G2-EU, EVOLVE50M-SW-G2, EVOLVE50M-CW-G2-EU, EVOLVE50M-CB-G2-EU, EVOLVE50-CW-G2-EU, EVOLVE50-CB-G2-EU der Richtlinie 2014/53/EU entspricht. Der vollständige Text der EU-Konformitätserklärung ist unter der folgenden Internetadresse verfügbar: www.electrovoice.com
EL	Με την παρούσα ο/η Electro-Voice Dynacord LLC , δηλώνει ότι ο ραδιοεξοπλισμός EVOLVE30M-G2-EU, EVOLVE30M-G2-W, EVOLVE50-SB-G2-EU, EVOLVE50-SW-G2, EVOLVE50M-SB-G2-EU, EVOLVE50M-SW-G2, EVOLVE50M-CW-G2-EU, EVOLVE50M-CB-G2-EU, EVOLVE50-CW-G2-EU, EVOLVE50-CB-G2-EU πληροί την οδηγία 2014/53/ΕΕ. Το πλήρες κείμενο της δήλωσης συμμόρφωσης ΕΕ διατίθεται στην ακόλουθη ιστοσελίδα στο διαδίκτυο: www.electrovoice.com
EN	Hereby, Electro-Voice Dynacord LLC declares that the radio equipment type EVOLVE30M-G2-EU, EVOLVE30M-G2-W, EVOLVE50-SB-G2-EU, EVOLVE50-SW-G2, EVOLVE50M-SB-G2-EU, EVOLVE50M-SW-G2, EVOLVE50M-CW-G2-EU, EVOLVE50M-CB-G2-EU, EVOLVE50-CW-G2-EU, EVOLVE50-CB-G2-EU is in compliance with Directive 2014/53/EU and the relevant statutory requirements. The full text of the EU declaration of conformity is available at the following internet address: www.electrovoice.com.
ES	Por la presente, Electro-Voice Dynacord LLC declara que el tipo de equipo radioeléctrico EVOLVE30M-G2-EU, EVOLVE30M-G2-W, EVOLVE50-SB-G2-EU, EVOLVE50-SW-G2, EVOLVE50M-SB-G2-EU, EVOLVE50M-SW-G2, EVOLVE50M-CW-G2-EU, EVOLVE50M-CB-G2-EU, EVOLVE50-CW-G2-EU, EVOLVE50-CB-G2-EU es conforme con la Directiva 2014/53/UE. El texto completo de la declaración UE de conformidad está disponible en la dirección Internet siguiente: www.electrovoice.com.
ET	Käesolevaga deklareerib Electro-Voice Dynacord LLC , et käesolev raadioseadme tüüp EVOLVE30M-G2-EU, EVOLVE30M-G2-W, EVOLVE50-SB-G2-EU, EVOLVE50-SW-G2, EVOLVE50M-SB-G2-EU, EVOLVE50M-SW-G2, EVOLVE50M-CW-G2-EU, EVOLVE50M-CB-G2-EU, EVOLVE50-CW-G2-EU, EVOLVE50-CB-G2-EU vastab direktiivi 2014/53/EL nõuetele. ELi vastavusdeklaratsiooni täielik tekst on kättesaadav järgmisel internetiaadressil: www.electrovoice.com
FI	Electro-Voice Dynacord LLC vakuuttaa, että radiolaitetyyppi EVOLVE30M-G2-EU, EVOLVE30M-G2-W, EVOLVE50-SB-G2-EU, EVOLVE50-SW-G2, EVOLVE50M-SB-G2-EU, EVOLVE50M-SW-G2, EVOLVE50M-CW-G2-EU, EVOLVE50M-CB-G2-EU, EVOLVE50-CW-G2-EU, EVOLVE50-CB-G2-EU on direktiivin 2014/53/EU mukainen. EU-vaatimustenmukaisuusvakuutuksen täysimittainen teksti on saatavilla seuraavassa internetosoitteessa: www.electrovoice.com
FR	Le soussigné, Electro-Voice Dynacord LLC , déclare que l'équipement radioélectrique du type EVOLVE30M-G2-EU, EVOLVE30M-G2-W, EVOLVE50-SB-G2-EU, EVOLVE50-SW-G2, EVOLVE50M-SB-G2-EU, EVOLVE50M-SW-G2, EVOLVE50M-CW-G2-EU, EVOLVE50M-CB-G2-EU, EVOLVE50-CW-G2-EU, EVOLVE50-CB-G2-EU est conforme à la directive 2014/53/UE. Le texte complet de la déclaration UE de conformité est disponible à l'adresse internet suivante: www.electrovoice.com
HR	Electro-Voice Dynacord LLC ovime izjavljuje da je radijska oprema tipa EVOLVE30M-G2-EU, EVOLVE30M-G2-W, EVOLVE50-SB-G2-EU, EVOLVE50-SW-G2, EVOLVE50M-SB-G2-EU, EVOLVE50M-SW-G2, EVOLVE50M-CW-G2-EU, EVOLVE50M-CB-G2-EU,

	EVOLVE50-CW-G2-EU, EVOLVE50-CB-G2-EU u skladu s Direktivom 2014/53/EU. Cjeloviti tekst EU izjave o sukladnosti dostupan je na sljedećoj internetskoj adresi: www.electrovoice.com
HU	Electro-Voice Dynacord LLC igazolja, hogy a EVOLVE30M-G2-EU, EVOLVE30M-G2-W, EVOLVE50-SB-G2-EU, EVOLVE50-SW-G2, EVOLVE50M-SB-G2-EU, EVOLVE50M-SW-G2, EVOLVE50M-CW-G2-EU, EVOLVE50M-CB-G2-EU, EVOLVE50-CW-G2-EU, EVOLVE50-CB-G2-EU típusú rádióberendezés megfelel a 2014/53/EU irányelvnek. Az EU-megfelelőségi nyilatkozat teljes szövege elérhető a következő internetes címen: www.electrovoice.com
IT	Il fabbricante, Electro-Voice Dynacord LLC , dichiara che il tipo di apparecchiatura radio EVOLVE30M-G2-EU, EVOLVE30M-G2-W, EVOLVE50-SB-G2-EU, EVOLVE50-SW-G2, EVOLVE50M-SB-G2-EU, EVOLVE50M-SW-G2, EVOLVE50M-CW-G2-EU, EVOLVE50M-CB-G2-EU, EVOLVE50-CW-G2-EU, EVOLVE50-CB-G2-EU è conforme alla direttiva 2014/53/UE. Il testo completo della dichiarazione di conformità UE è disponibile al seguente indirizzo Internet: www.electrovoice.com
LT	Aš, Electro-Voice Dynacord LLC , patvirtinu, kad radijo įrenginių tipas EVOLVE30M-G2-EU, EVOLVE30M-G2-W, EVOLVE50-SB-G2-EU, EVOLVE50-SW-G2, EVOLVE50M-SB-G2-EU, EVOLVE50M-SW-G2, EVOLVE50M-CW-G2-EU, EVOLVE50M-CB-G2-EU, EVOLVE50-CW-G2-EU, EVOLVE50-CB-G2-EU atitinka Direktyvą 2014/53/ES. Visas ES atitikties deklaracijos tekstas prieinamas šiuo interneto adresu: www.electrovoice.com
LV	Ar šo Electro-Voice Dynacord LLC deklarē, ka radioiekārta EVOLVE30M-G2-EU, EVOLVE30M-G2-W, EVOLVE50-SB-G2-EU, EVOLVE50-SW-G2, EVOLVE50M-SB-G2-EU, EVOLVE50M-SW-G2, EVOLVE50M-CW-G2-EU, EVOLVE50M-CB-G2-EU, EVOLVE50-CW-G2-EU, EVOLVE50-CB-G2-EU atbilst Direktīvai 2014/53/ES. Pilns ES atbilstības deklarācijas teksts ir pieejams šādā interneta vietnē: www.electrovoice.com
MT	B'dan, Electro-Voice Dynacord LLC , niddikjara li dan it-tip ta' tagħmir tar-radju EVOLVE30M-G2-EU, EVOLVE30M-G2-W, EVOLVE50-SB-G2-EU, EVOLVE50-SW-G2, EVOLVE50M-SB-G2-EU, EVOLVE50M-SW-G2, EVOLVE50M-CW-G2-EU, EVOLVE50M-CB-G2-EU, EVOLVE50-CW-G2-EU, EVOLVE50-CB-G2-EU huwa konformi mad-Direttiva 2014/53/UE. It-test kollu tad-dikjarazzjoni ta' konformità tal-UE huwa disponibbli f'dan l-indirizz tal-Internet li ġej: www.electrovoice.com
NL	Hierbij verklaar ik, Electro-Voice Dynacord LLC , dat het type radioapparatuur EVOLVE30M-G2-EU, EVOLVE30M-G2-W, EVOLVE50-SB-G2-EU, EVOLVE50-SW-G2, EVOLVE50M-SB-G2-EU, EVOLVE50M-SW-G2, EVOLVE50M-CW-G2-EU, EVOLVE50M-CB-G2-EU, EVOLVE50-CW-G2-EU, EVOLVE50-CB-G2-EU conform is met Richtlijn 2014/53/EU. De volledige tekst van de EU-conformiteitsverklaring kan worden geraadpleegd op het volgende internetadres: www.electrovoice.com
PL	Electro-Voice Dynacord LLC niniejszym oświadcza, że typ urządzenia radiowego EVOLVE30M-G2-EU, EVOLVE30M-G2-W, EVOLVE50-SB-G2-EU, EVOLVE50-SW-G2, EVOLVE50M-SB-G2-EU, EVOLVE50M-SW-G2, EVOLVE50M-CW-G2-EU, EVOLVE50M-CB-G2-EU, EVOLVE50-CW-G2-EU, EVOLVE50-CB-G2-EU jest zgodny z dyrektywą 2014/53/UE. Pełny tekst deklaracji zgodności UE jest dostępny pod następującym adresem internetowym: www.electrovoice.com

PT	O(a) abaixo assinado(a) Electro-Voice Dynacord LLC declara que o presente tipo de equipamento de rádio EVOLVE30M-G2-EU, EVOLVE30M-G2-W, EVOLVE50-SB-G2-EU, EVOLVE50-SW-G2, EVOLVE50M-SB-G2-EU, EVOLVE50M-SW-G2, EVOLVE50M-CW-G2-EU, EVOLVE50M-CB-G2-EU, EVOLVE50-CW-G2-EU, EVOLVE50-CB-G2-EU está em conformidade com a Diretiva 2014/53/UE. O texto integral da declaração de conformidade está disponível no seguinte endereço de Internet: www.electrovoice.com
RO	Prin prezenta, Electro-Voice Dynacord LLC declară că tipul de echipamente radio EVOLVE30M-G2-EU, EVOLVE30M-G2-W, EVOLVE50-SB-G2-EU, EVOLVE50-SW-G2, EVOLVE50M-SB-G2-EU, EVOLVE50M-SW-G2, EVOLVE50M-CW-G2-EU, EVOLVE50M-CB-G2-EU, EVOLVE50-CW-G2-EU, EVOLVE50-CB-G2-EU este în conformitate cu Directiva 2014/53/UE. Textul integral al declarației UE de conformitate este disponibil la următoarea adresă internet: www.electrovoice.com
SK	Electro-Voice Dynacord LLC týmto vyhlasuje, že rádiové zariadenie typu EVOLVE30M-G2-EU, EVOLVE30M-G2-W, EVOLVE50-SB-G2-EU, EVOLVE50-SW-G2, EVOLVE50M-SB-G2-EU, EVOLVE50M-SW-G2, EVOLVE50M-CW-G2-EU, EVOLVE50M-CB-G2-EU, EVOLVE50-CW-G2-EU, EVOLVE50-CB-G2-EU je v súlade so smernicou 2014/53/EÚ. Úplné EÚ vyhlásenie o zhode je k dispozícii na tejto internetovej adrese: www.electrovoice.com
SL	Electro-Voice Dynacord LLC potrjuje, da je tip radijske opreme EVOLVE30M-G2-EU, EVOLVE30M-G2-W, EVOLVE50-SB-G2-EU, EVOLVE50-SW-G2, EVOLVE50M-SB-G2-EU, EVOLVE50M-SW-G2, EVOLVE50M-CW-G2-EU, EVOLVE50M-CB-G2-EU, EVOLVE50-CW-G2-EU, EVOLVE50-CB-G2-EU skladen z Direktivo 2014/53/EU. Celotno besedilo izjave EU o skladnosti je na voljo na naslednjem spletnem naslovu: www.electrovoice.com
SV	Härmed försäkrar Electro-Voice Dynacord LLC att denna typ av radioutrustning EVOLVE30M-G2-EU, EVOLVE30M-G2-W, EVOLVE50-SB-G2-EU, EVOLVE50-SW-G2, EVOLVE50M-SB-G2-EU, EVOLVE50M-SW-G2, EVOLVE50M-CW-G2-EU, EVOLVE50M-CB-G2-EU, EVOLVE50-CW-G2-EU, EVOLVE50-CB-G2-EU överensstämmer med direktiv 2014/53/EU. Den fullständiga texten till EU-försäkran om överensstämmelse finns på följande webbadress: www.electrovoice.com

13.6.3 Regulatory notice for CE - Information concerning the use of the apparatus

This equipment has been tested and found to be compliant with class B emission limits. The electromagnetic disturbance generated does not exceed the level above which radio and telecommunications equipment or other equipment cannot operate as intended. This means that there are no restrictions for usage in residential and commercial environments.

13.6.4 Certifications

Brazil:

Após uma perturbação da rede elétrica, o EVOLVE G2 pode entrar em estado de segurança. Neste caso, você deve desligar e ligar o dispositivo novamente.

Este equipamento não tem direito à proteção contra interferência prejudicial e não pode causar interferência em sistemas devidamente autorizados.

Este equipamento deve ser conectado obrigatoriamente em tomada de rede de energia elétrica que possua aterramento (três pinos), conforme a Norma de instalações elétricas ABNT NBR 5410, visando a segurança dos usuários contra choques elétricos.

Incorpora produto homologado pela ANATEL sob número 01000-24-07826.

Para mais informações, consulte o site da ANATEL: www.anatel.gov.br.

13.6.5 Notices

Copyright and disclaimer

All rights reserved. No part of this document may be reproduced or transmitted in any form by any means, electronic, mechanical, photocopying, recording, or otherwise, without the prior written permission of the publisher. For information on getting permission for reprints and excerpts, contact Electro-Voice.

All content including specifications, data, and illustrations in this manual are subject to change without prior notice.

Notice!

To report security vulnerability use this link: https://www.keenfinity-group.com/xc/en/support/product-security/

Bluetooth®

The Bluetooth® word mark and logos are registered trademarks owned by Bluetooth SIG, Inc. and any use of such marks by Electro-Voice Dynacord LLC is under license. Other trademarks and trade names are those of their respective owners.

Radio information

This loudspeaker contains intentionally emitting radio waves in the 2.4Ghz frequency band (2,400 MHz to 2483.5 MHz) with a transmit power of 7 dBm +/- 1 dB EIRP. The system uses one antenna with a gain of 1dBi +/- 1dB.

扬声器

电器电子产品有害物质的名称及含有信息表										
	铅	汞	镉	六价铬	多溴联苯	多溴二苯醚	邻苯二甲酸二（2-乙基）己酯	邻苯二甲酸丁苄酯	邻苯二甲酸二正丁酯	邻苯二甲酸二异丁酯
电路板 (PCB)	O	O	O	O	O	O	O	O	O	O
电子组件	X	O	O	O	O	O	O	O	O	O
换能器	X	O	O	O	O	O	O	O	O	O
显示屏	X	O	O	O	O	O	O	O	O	O
缆线和电线	O	O	O	O	O	O	O	O	O	O
塑料材料	O	O	O	O	O	O	O	O	O	O
金属材料	X	O	O	O	O	O	O	O	O	O
木材与纸张材料	O	O	O	O	O	O	O	O	O	O
喷漆和涂层	O	O	O	O	O	O	O	O	O	O
本表依据 SJ/T 11364-2024 编制。										
O: 表示该部件所有均质材料中所含的有害物质低于GB 26572-2025的限值要求。										
X: 表示该部件使用的至少一种均质材料中所含的所述有害物质超过了GB 26572-2025的限值要求。										
限值要求依据 GB 26572-2025。										

生产日期代码以 YYWW 格式标注在产品上，或是序列号的一部分，具体说明如下：
https://www.keenfinity-group.com/xc/en/datecodes/

QA PASS 合格证 制造商详见产品或包装标签

Importers

China
ELECTRO VOICE DYNACORD (Shanghai) Electronic Systems Co., Ltd.
Unit 603B, Tower D, No. 788 Jinzhong Road
Changning District Shanghai
200335 P.R. China

艺威大地(上海)电子系统有限公司
上海市长宁区金钟路788号D栋603B
邮编：200335

Mexico
KEENFINITY, S.A. de C.V.
Calle Robert Bosch No. Ext. 405
C.P.50071
Zona industrial Toluca
Mexico
Phone: +52 722 279 2300

Disposal

Old electrical and electronic equipment

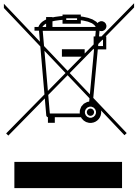	This product and/or battery must be disposed of separately from household waste. Dispose such equipment according to local laws and regulations, to allow their reuse and/or recycling. This will help in conserving resources, and in protecting human health and the environment.

For use in France: Sorting Info label (Info-tri)

More information
For additional regulatory and country-specific certification information, refer to the column loudspeaker system's LCD screens.

To find additional regulatory and country-specific certification information:
1. Navigate to the **IMPRINT & LICENSE** section in the main DSP menu.
2. Press the encoder to confirm.
3. Turn the encoder to scroll through the displayed text.
4. Press the encoder to exit.

Download the Electro-Voice QuickSmart App for iOS and Android. Ensure that the loudspeaker's firmware is up to date for the most recent legal and regulatory information.

Electro-Voice Dynacord LLC
12000 Portland Avenue South
MN 55337 Burnsville
USA
www.electrovoice.com
© Electro-Voice Dynacord 2026

EU importer:
EVI Audio GmbH
Sachsenring 60
94315 Straubing
Germany
© EVI Audio GmbH, 2026

202605151612